| PREPARED BY : DATE | SHARP | SPEC No. LD-13718 |
|---|---|---|
| | | FILE No. |
| APPROVED BY : DATE | | ISSUE : Sep. 3 , 2001 |
| | | PAGE : 20 pages |
| | TFT LIQUID CRYSTAL DISPLAY GROUP<br>SHARP CORPORATION<br><br>SPECIFICATION | APPLICABLE GROUP<br>TFT LIQUID CRYSTAL DISPLAY GROUP |

DEVICE SPECIFICATION FOR

# TFT-LCD Module

MODEL No.

# LQ133X1LH92

☐ CUSTOMER'S APPROVAL

DATE _____

BY _____

PRESENTED

BY Makoto Takeda

M. TAKEDA
Department General Manager
Development Engineering Department Ⅲ
TFT Division Ⅱ
TFT LIQUID CRYSTAL DISPLAY GROUP
SHARP CORPORATION

# RECORDS OF REVISION

LQ133X1LH92

| SPEC No. | DATE | REVISED No. | PAGE | SUMMARY | NOTE |
|---|---|---|---|---|---|
| LD-13718 | Sep.3.2001 | - | - | | 1st Issue |

The device listed in these technical literature sheets was designed and manufactured for use in OA equipment.

In case of using the device for applications such as control and safety equipment for transportation(aircraft, trains, automobiles, etc. ), rescue and security equipment and various safety related equipment which require higher reliability and safety, take into consideration that appropriate measures such as fail-safe functions and redundant system design should be taken.

Do not use the device for equipment that requires an extreme level of reliability, such as aerospace applications, telecommunication equipment(trunk lines), nuclear power control equipment and medical or other equipment for life support.

SHARP assumes no responsibility for any damage resulting from the use of the device which does not comply with the instructions and the precautions specified in these technical literature sheets.

Contact and consult with a SHARP sales representative for any questions about this device.

1. Application

This specification applies to a color TFT-LCD module, LQ133X1LH92.

2. Overview

This module is a color active matrix LCD module incorporating amorphous silicon TFT (Thin Film Transistor). It is composed of a color TFT-LCD panel, driver ICs, control circuit and power supply circuit and a backlight unit. Graphics and texts can be displayed on a 1024×3×768 dots panel with 262,144 colors by using LVDS (Low Voltage Differential Signaling) to interface and supplying +3.3V DC supply voltage for TFT-LCD panel driving and supply voltage for backlight.

The TFT-LCD panel used for this module has very high aperture ratio. A low-reflection and higher-color-saturation type color filter is also used for this panel. Therefore, high-brightness and high-contrast image, which is suitable for the multimedia use, can be obtained by using this module.

Optimum viewing direction is 6 o'clock.

Backlight-driving DC/AC inverter is not built in this module.

[Features]

1) High aperture panel ; high-brightness or low power consumption.
2) Brilliant and high contrast image.
3) Small footprint and thin shape.
4) Light weight.

3. Mechanical Specifications

| Parameter | Specifications | Unit |
|---|---|---|
| Display size | 34 (13.3") Diagonal | cm |
| Active area | 270.3 (H)×202.8 (V) | mm |
| Pixel format | 1024 (H)×768 (V) | pixel |
| | (1 pixel = R+G+B dots) | |
| Pixel pitch | 0.264 (H) × 0.264 (V) | mm |
| Pixel configuration | R,G,B vertical stripe | |
| Display mode | Normally white | |
| Unit outline dimensions (typ.)*1 | 284.0(W)×216.5 (H)×6.0max(D) | mm |
| Mass | 465±20 | g |
| Surface treatment | Anti-glare and hard-coating 2H | |

*1.Note : excluding backlight cables.

Outline dimensions is shown in Fig.1

4. Input Terminals

4-1. TFT-LCD panel driving

CN1 (LVDS signals and +3.3V DC power supply)

Using connector : FI-SEB20P-HF10(JAE)

Corresponding connector : FI-SE20M,or FI-S20S (JAE)

| Pin No. | Symbol | Function | Remark |
|---|---|---|---|
| 1 | Vcc | +3.3V power supply | |
| 2 | Vcc | +3.3V power supply | |
| 3 | GND | | |
| 4 | GND | | |
| 5 | RXIN0- | Receiver signal (-) | LVDS |
| 6 | RXIN0+ | Receiver signal (+) | LVDS |
| 7 | GND | | |
| 8 | RXIN1- | Receiver signal (-) | LVDS |
| 9 | RXIN1+ | Receiver signal (+) | LVDS |
| 10 | GND | | |
| 11 | RXIN2- | Receiver signal (-) | LVDS |
| 12 | RXIN2+ | Receiver signal (+) | LVDS |
| 13 | GND | | |
| 14 | RXCLKIN- | Clock signal (-) | LVDS |
| 15 | RXCLKIN+ | Clock signal (+) | LVDS |
| 16 | GND | | |
| 17 | Vedid | DDC+3.3V power supply | |
| 18 | NC | Reserved | |
| 19 | CLKedid | DDC Clock | |
| 20 | DATAedid | DDC Data | |

【Note 1】Relation between LVDS signals and actual data shows below section (4-2).

【Note 2】The shielding case is connected with signal GND

4-2 Interface block diagram

Using receiver：Single LVDS interface,which equals THC63LVDF64A(THine),contained in a control IC

Corresponding Transmitter：DS90C363,DS90C383,DS90C363A,DS90C383A(National semiconductor),THC63LVDF63A,THC63LVDM63A(THine)

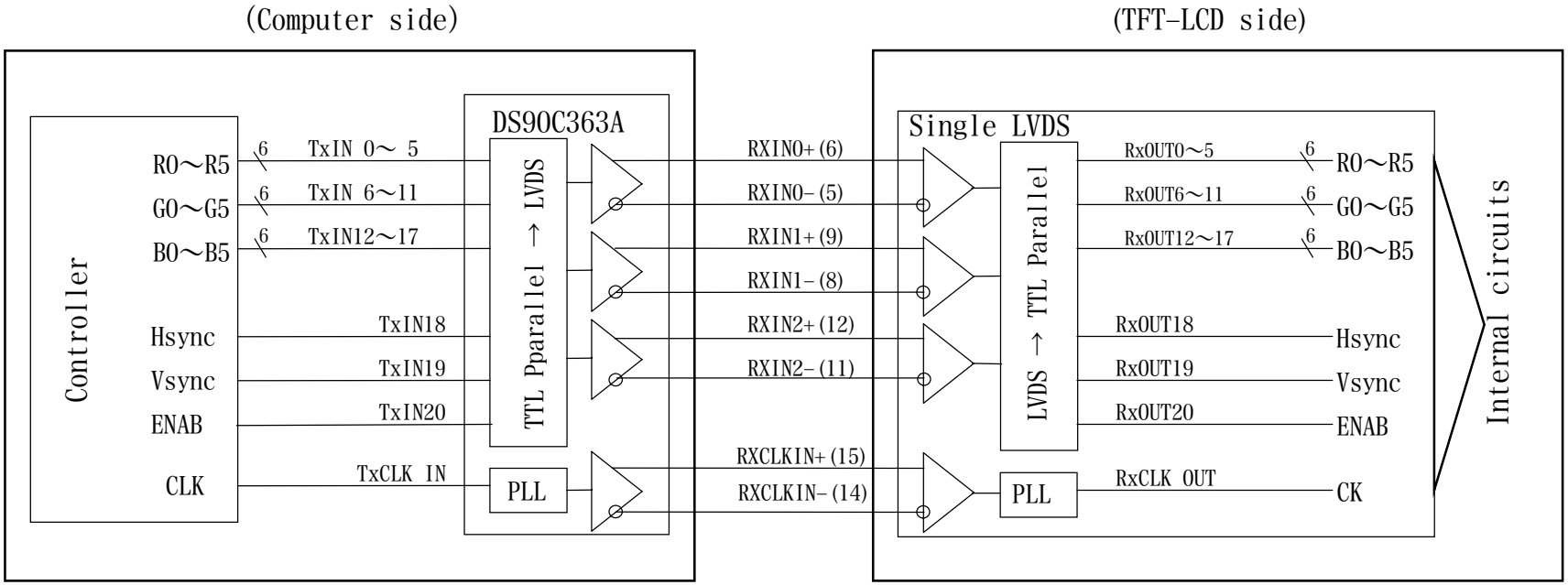

4-3. Backlight driving

CN2 : BHSR-02VS-1(JST)

Mating connector : SM02B-BHSS-1-TB(JST)

| Pin no. | symbol | function |
|---|---|---|
| 1 | $V_{HIGH}$ | Power supply for lamp (High voltage side) |
| 2 | $V_{LOW}$ | Power supply for lamp (Low voltage side) |

5. Absolute Maximum Ratings

| Parameter | Symbol | Condition | Ratings | Unit | Remark |
|---|---|---|---|---|---|
| Input voltage | $V_I$ | Ta=25℃ | −0.3 ～ Vcc+0.3 | V | 【Note1】 |
| +3.3V supply voltage | Vcc | Ta=25℃ | 0 ～ ＋ 4 | V | |
| Storage temperature | Tstg | − | −25 ～ ＋60 | ℃ | 【Note2】 |
| Operating temperature (Ambient) | Topa | − | 0 ～ ＋50 | ℃ | |

【Note1】LVDS signals

【Note2】Humidity：95%RH Max. at Ta≦40℃.

Maximum wet-bulb temperature at 39℃ or less at Ta>40℃.

No condensation.

6. Electrical Characteristics

6-1.TFT-LCD panel driving Ta＝25℃

| Parameter | | | Symbol | Min. | Typ. | Max. | Unit | Remark |
|---|---|---|---|---|---|---|---|---|
| Vcc | Supply voltage | | Vcc | +3.0 | +3.3 | +3.6 | V | 【Note2】 |
| | Current dissipation | | Icc | − | 330 | 540 | mA | 【Note3】 |
| Permissive input ripple voltage | | | $V_{RP}$ | − | − | 100 | mV p-p | Vcc=+3.3V |
| Differential input threshold voltage | | High | $V_{TH}$ | − | − | +100 | mV | $V_{CM}$=+1.2V 【Note1】 |
| | | Low | $V_{TL}$ | –100 | − | − | mV | |
| Input current (High) | | | $I_{OH}$ | − | − | ±10 | μA | $V_I$=2.4V Vcc=3.6V |
| Input current (Low) | | | $I_{OL}$ | − | − | ±10 | μA | $V_I$=0V Vcc=3.6V |
| Terminal resistor | | | $R_T$ | − | 100 | − | Ω | Differential input |

【Note1】 $V_{CM}$ : Common mode voltage of LVDS driver.

【Note2】

On-off conditions for supply voltage

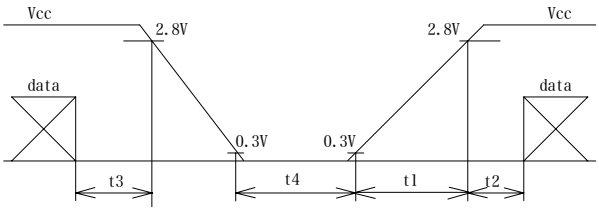


0＜t1≦10 ms

0＜t2≦100 ms

0＜t3≦1 s

t4＞200ms

Vcc-dip conditions

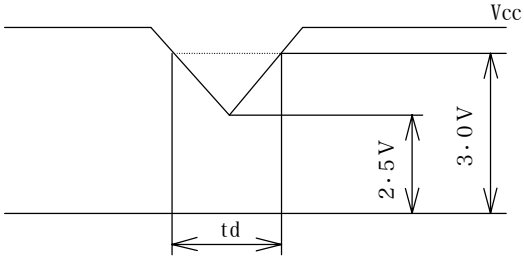


1) 2.5 V≦Vcc＜3.0 V
   td≦10 ms
2) Vcc＜2.5 V

Vcc-dip conditions should also follow the On-off conditions for supply voltage

【Note3】 Typical current situation : 16-gray-bar pattern.

Vcc=+3.3V

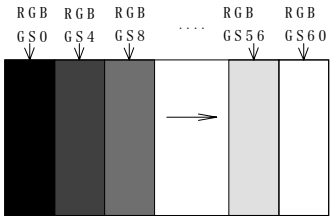

6-2. Backlight driving

The backlight system is an edge-lighting type with single CCFT (Cold Cathode Fluorescent Tube). The characteristics of the lamp are shown in the following table.

| Parameter | Symbol | Min. | Typ. | Max. | Unit | Remark | |
|---|---|---|---|---|---|---|---|
| Lamp current range | $I_L$ | 2.0 | 5.5 | 6.0 | mArms | 【Note1】 | |
| Lamp voltage | $V_L$ | — | 640 | — | Vrms | | |
| Lamp power consumption | $P_L$ | — | 3.52 | — | W | 【Note2】 | |
| Lamp frequency | $F_L$ | 42 | 60 | 70 | kHz | 【Note3】 | |
| Kick-off voltage | Vs | — | — | 1170 | Vrms | Ta=25℃ | 【Note4】 |
| | | — | — | 1405 | Vrms | Ta=0℃ | |
| Lamp life time | $L_L$ | 10000 | — | — | hour | 【Note5】 | |

【Note1】 Lamp current is measured with current meter for high frequency as shown below.

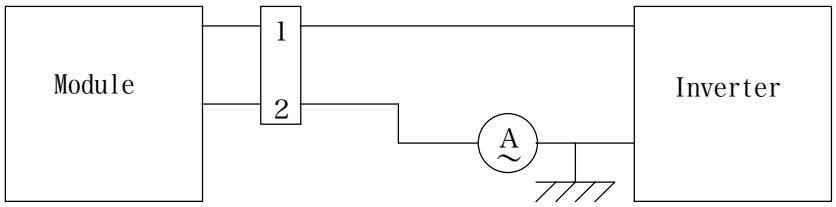


＊ 2 pin is $V_{LOW}$

【Note2】 Calculated Value for reference ( $I_L \times V_L$)

【Note3】 Lamp frequency may produce interference with horizontal synchronous frequency, and this may cause beat on the display. Therefore lamp frequency shall be detached as much as possible from the horizontal synchronous frequency and from the harmonics of horizontal synchronous to avoid interference.

【Note4】 It is defined at 22pF for the ballast capacitor of a DC/AC inverter.
The voltage above this value should be applied to the lamp for more than 1 second to start-up. Otherwise the lamp may not be turned on.

【Note5】 Lamp life time is defined as the time when either ① or ② occurs in the continuous operation under the condition of Ta = 25℃ and $I_L$ = 6.0mArms.

① Brightness becomes 50 % of the original value under standard condition.

② Kick-off voltage at Ta = 0℃ exceeds maximum value, 1405V rms.

Note) The performance of the backlight, for example life time or brightness, is much influenced by the characteristics of the DC-AC inverter for the lamp. When you design or order the inverter, please make sure that a poor lighting caused by the mismatch of the backlight and the inverter (miss-lighting, flicker, etc.) never occur. When you confirm it, the module should be operated in the same condition as it is installed in your instrument.

7. Timing characteristics of input signals

7-1. Timing characteristics

(This is specified at digital outputs of LVDS driver.)

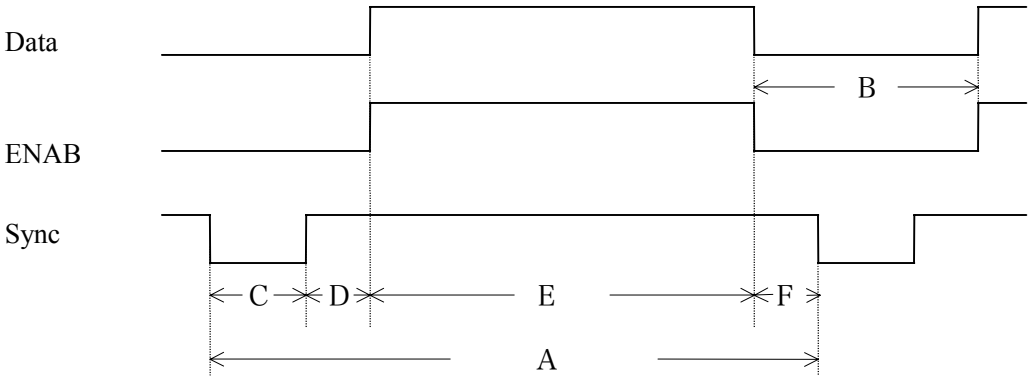


(Vertical)

| Item (symbol) | Min. | Typ. | Max. | Unit | Remark |
|---|---|---|---|---|---|
| Vsync cycle ($T_{VA}$) | — | 16.667 | — | ms | Negative |
| | 803 | 806 | | line | |
| Blanking period($T_{VB}$) | 35 | 38 | — | line | |
| Sync pulse width ($T_{VC}$) | 4 | 6 | — | line | |
| Back porch ($T_{VD}$) | 0 | 29 | | line | |
| Sync pulse width + Back porch ($T_{VC}$+$T_{VD}$) | 35 | 35 | 35 | line | |
| Active display area ($T_{VE}$) | 768 | 768 | 768 | line | |
| Front porch ($T_{VF}$) | 0 | 3 | — | line | |

(Horizontal)

| Item (symbol) | Min. | Typ. | Max. | Unit | Remark |
|---|---|---|---|---|---|
| Hsync cycle ($T_{HA}$) | 19.4 | 20.677 | — | μs | Negative |
| | 1260 | 1344 | 1408 | clock | |
| Blanking period ($T_{HB}$) | 236 | 320 | — | clock | |
| Sync pulse width ($T_{HC}$) | 8 | 136 | — | clock | |
| Back porch ($T_{HD}$) | 0 | 160 | 312 | clock | |
| Sync pulse width + Back porch ($T_{HC}$ +$T_{HD}$) | 1500 - $T_{HA}$ | 296 | $T_{HA}$ - 1024 | clock | |
| Active display area ($T_{HE}$) | 1024 | 1024 | 1024 | clock | |
| Front porch ($T_{HF}$) | 0 | 24 | — | clock | |

(Clock)

| Item | Min. | Typ. | Max. | Unit | Remark |
|---|---|---|---|---|---|
| Frequency | 50.0 | 65.0 | 65.0 | MHz | 【Note1】 |

Note) In case of lower frequency, the deterioration of display quality, flicker etc., may be occurred.

(Hsync-Vsync Phase difference)

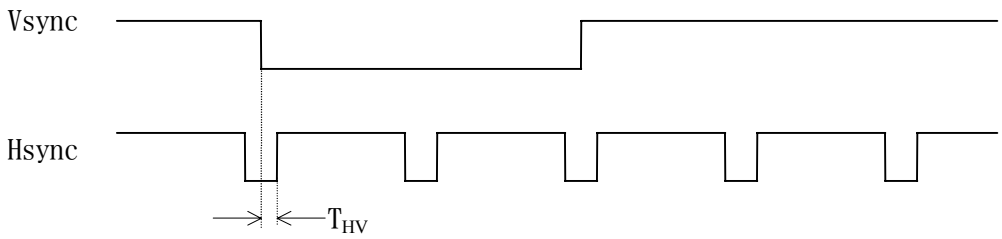


| Item(symbol) | Min. | Typ. | Max. | Unit | Remark |
|---|---|---|---|---|---|
| Hsync-Vsync Phase difference ($T_{HV}$) | 1 | — | $T_{HA}-T_{HC}$ | clock | |

(Hsync-ENAB Phase difference)

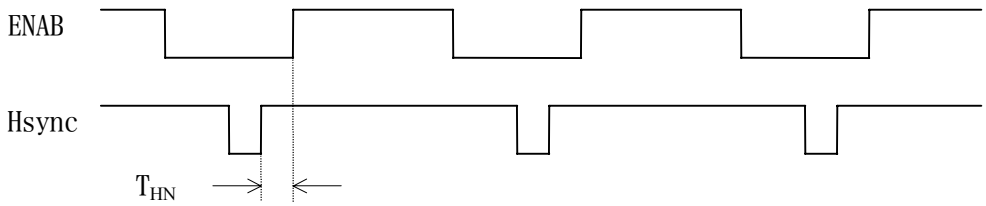


| Item | Min. | Typ. | Max. | Unit | Remark |
|---|---|---|---|---|---|
| ($T_{HN}$) | 0 | — | 312 | clock | |

7-2 Display position

| Item | Standards | Beginning | Ending | Unit | Remark |
|---|---|---|---|---|---|
| Horizontal | rising edge of ENAB | 0 | 1024 | clock | |
| | falling edge of Hsync | 296 | 1320 | clock | 【Note1】 |
| Vertical | falling edge of Vsync | 35 | 803 | clock | |

【Note1】 ENAB signal must be fixed to low.

［Note］

(Horizontal display direction)

When ENAB is fixed low, 296 clock are counted from Hsync negative edge and data from after are available . If you need other timing, please use ENAB signal.

(Vertical display direction)

35 lines are counted from Vsync negative edge and data from next line are available.

(Note of ENAB signal)

ENAB could not be used for the purpose of the vertical display start timing.

<u>Caution</u>

Image will not be displayed on the right position otherwise.

7-3. Input Data Signals and Display Position on the screen

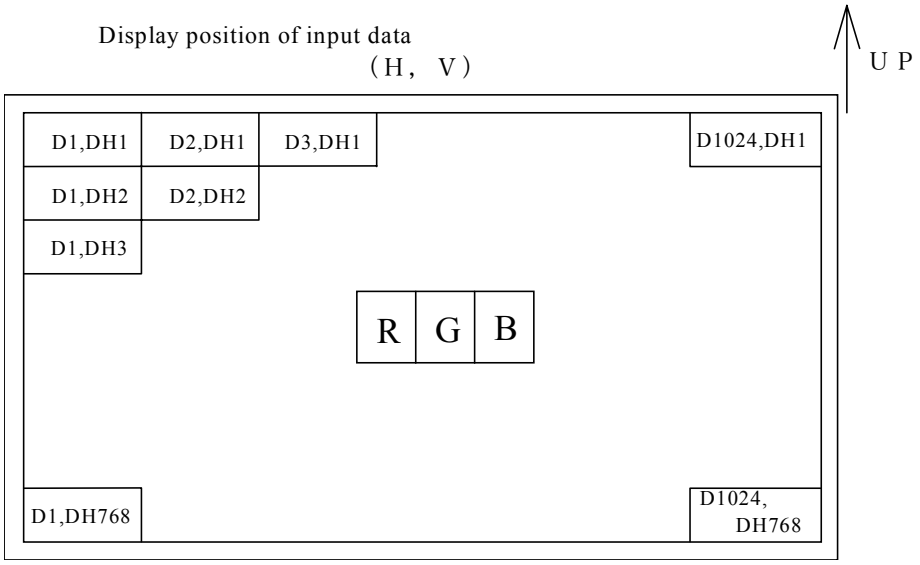

8. Input Signals, Basic Display Colors and Gray Scale of Each Color

| | Colors & Gray scale | Data signal | | | | | | | | | | | | | | | | | | |
|---|---|---|---|---|---|---|---|---|---|---|---|---|---|---|---|---|---|---|---|---|
| | | Gray Scale | R0 | R1 | R2 | R3 | R4 | R5 | G0 | G1 | G2 | G3 | G4 | G5 | B0 | B1 | B2 | B3 | B4 | B5 |
| Basic Color | Black | — | 0 | 0 | 0 | 0 | 0 | 0 | 0 | 0 | 0 | 0 | 0 | 0 | 0 | 0 | 0 | 0 | 0 | 0 |
| | Blue | — | 0 | 0 | 0 | 0 | 0 | 0 | 0 | 0 | 0 | 0 | 0 | 0 | 1 | 1 | 1 | 1 | 1 | 1 |
| | Green | — | 0 | 0 | 0 | 0 | 0 | 0 | 1 | 1 | 1 | 1 | 1 | 1 | 0 | 0 | 0 | 0 | 0 | 0 |
| | Cyan | — | 0 | 0 | 0 | 0 | 0 | 0 | 1 | 1 | 1 | 1 | 1 | 1 | 1 | 1 | 1 | 1 | 1 | 1 |
| | Red | — | 1 | 1 | 1 | 1 | 1 | 1 | 0 | 0 | 0 | 0 | 0 | 0 | 0 | 0 | 0 | 0 | 0 | 0 |
| | Magenta | — | 1 | 1 | 1 | 1 | 1 | 1 | 0 | 0 | 0 | 0 | 0 | 0 | 1 | 1 | 1 | 1 | 1 | 1 |
| | Yellow | — | 1 | 1 | 1 | 1 | 1 | 1 | 1 | 1 | 1 | 1 | 1 | 1 | 0 | 0 | 0 | 0 | 0 | 0 |
| | White | — | 1 | 1 | 1 | 1 | 1 | 1 | 1 | 1 | 1 | 1 | 1 | 1 | 1 | 1 | 1 | 1 | 1 | 1 |
| Gray Scale of Red | Black | GS0 | 0 | 0 | 0 | 0 | 0 | 0 | 0 | 0 | 0 | 0 | 0 | 0 | 0 | 0 | 0 | 0 | 0 | 0 |
| | ⇧ | GS1 | 1 | 0 | 0 | 0 | 0 | 0 | 0 | 0 | 0 | 0 | 0 | 0 | 0 | 0 | 0 | 0 | 0 | 0 |
| | Darker | GS2 | 0 | 1 | 0 | 0 | 0 | 0 | 0 | 0 | 0 | 0 | 0 | 0 | 0 | 0 | 0 | 0 | 0 | 0 |
| | ⇧ | ↓ | | | | ↓ | | | | | | ↓ | | | | | | ↓ | | |
| | ⇩ | ↓ | | | | ↓ | | | | | | ↓ | | | | | | ↓ | | |
| | Brighter | GS61 | 1 | 0 | 1 | 1 | 1 | 1 | 0 | 0 | 0 | 0 | 0 | 0 | 0 | 0 | 0 | 0 | 0 | 0 |
| | ⇩ | GS62 | 0 | 1 | 1 | 1 | 1 | 1 | 0 | 0 | 0 | 0 | 0 | 0 | 0 | 0 | 0 | 0 | 0 | 0 |
| | Red | GS63 | 1 | 1 | 1 | 1 | 1 | 1 | 0 | 0 | 0 | 0 | 0 | 0 | 0 | 0 | 0 | 0 | 0 | 0 |
| Gray Scale of Green | Black | GS0 | 0 | 0 | 0 | 0 | 0 | 0 | 0 | 0 | 0 | 0 | 0 | 0 | 0 | 0 | 0 | 0 | 0 | 0 |
| | ⇧ | GS1 | 0 | 0 | 0 | 0 | 0 | 0 | 1 | 0 | 0 | 0 | 0 | 0 | 0 | 0 | 0 | 0 | 0 | 0 |
| | Darker | GS2 | 0 | 0 | 0 | 0 | 0 | 0 | 0 | 1 | 0 | 0 | 0 | 0 | 0 | 0 | 0 | 0 | 0 | 0 |
| | ⇧ | ↓ | | | | ↓ | | | | | | ↓ | | | | | | ↓ | | |
| | ⇩ | ↓ | | | | ↓ | | | | | | ↓ | | | | | | ↓ | | |
| | Brighter | GS61 | 0 | 0 | 0 | 0 | 0 | 0 | 1 | 0 | 1 | 1 | 1 | 1 | 0 | 0 | 0 | 0 | 0 | 0 |
| | ⇩ | GS62 | 0 | 0 | 0 | 0 | 0 | 0 | 0 | 1 | 1 | 1 | 1 | 1 | 0 | 0 | 0 | 0 | 0 | 0 |
| | Green | GS63 | 0 | 0 | 0 | 0 | 0 | 0 | 1 | 1 | 1 | 1 | 1 | 1 | 0 | 0 | 0 | 0 | 0 | 0 |
| Gray Scale of Blue | Black | GS0 | 0 | 0 | 0 | 0 | 0 | 0 | 0 | 0 | 0 | 0 | 0 | 0 | 0 | 0 | 0 | 0 | 0 | 0 |
| | ⇧ | GS1 | 0 | 0 | 0 | 0 | 0 | 0 | 0 | 0 | 0 | 0 | 0 | 0 | 1 | 0 | 0 | 0 | 0 | 0 |
| | Darker | GS2 | 0 | 0 | 0 | 0 | 0 | 0 | 0 | 0 | 0 | 0 | 0 | 0 | 0 | 1 | 0 | 0 | 0 | 0 |
| | ⇧ | ↓ | | | | ↓ | | | | | | ↓ | | | | | | ↓ | | |
| | ⇩ | ↓ | | | | ↓ | | | | | | ↓ | | | | | | ↓ | | |
| | Brighter | GS61 | 0 | 0 | 0 | 0 | 0 | 0 | 0 | 0 | 0 | 0 | 0 | 0 | 1 | 0 | 1 | 1 | 1 | 1 |
| | ⇩ | GS62 | 0 | 0 | 0 | 0 | 0 | 0 | 0 | 0 | 0 | 0 | 0 | 0 | 0 | 1 | 1 | 1 | 1 | 1 |
| | Blue | GS63 | 0 | 0 | 0 | 0 | 0 | 0 | 0 | 0 | 0 | 0 | 0 | 0 | 1 | 1 | 1 | 1 | 1 | 1 |

0 : Low level voltage, 1 : High level voltage

Each basic color can be displayed in 64 gray scales from 6 bit data signals. According to the combination of total 18 bit data signals, the 262,144-color display can be achieved on the screen.

## 9. EDID data structure

This is the EDID(Extended Display Identification Data) data formats to support displays as defined in the VESA Plug & Display .

| Byte (decimal) | Byte (hex) | Field Name and Comments | Value (hex) | Value (binary) |
|---|---|---|---|---|
| 0 | 00 | Header | 00 | 00000000 |
| 1 | 01 | Header | FF | 11111111 |
| 2 | 02 | Header | FF | 11111111 |
| 3 | 03 | Header | FF | 11111111 |
| 4 | 04 | Header | FF | 11111111 |
| 5 | 05 | Header | FF | 11111111 |
| 6 | 06 | Header | FF | 11111111 |
| 7 | 07 | Header | 00 | 00000000 |
| 8 | 08 | EISA manufacture code = SHP | 4D | 01001101 |
| 9 | 09 | EISA manufacture code (Compressed ASCII) | 10 | 00010000 |
| 10 | 0A | Product code (LO133X1LH92 : ”5004”) | 8C | 10001100 |
| 11 | 0B | Product code (hex,LSB first) | 13 | 00010011 |
| 12 | 0C | LCD module Serial No (fixed “0”) | 00 | 00000000 |
| 13 | 0D | LCD module Serial No (fixed “0”) | 00 | 00000000 |
| 14 | 0E | LCD module Serial No (fixed “0”) | 00 | 00000000 |
| 15 | 0F | LCD module Serial No (fixed “0”) | 00 | 00000000 |
| 16 | 10 | Week of manufacture (fixed “0”) | 00 | 00000000 |
| 17 | 11 | Year of manufacture - 1990 (ex 2000 – 1990 = 10) (fixed “0”) | 00 | 00000000 |
| 18 | 12 | EDID structure version # = 1 | 01 | 00000001 |
| 19 | 13 | EDID revision # = 3 | 03 | 00000011 |
| 20 | 14 | Video i/p definition = Digital i/p | 80 | 10000000 |
| 21 | 15 | Max H image size(cm) = 27cm | 1B | 00011011 |
| 22 | 16 | Max V image size(cm) = 20cm | 14 | 00010100 |
| 23 | 17 | Display gamma (2.2×100) – 100 = 120 | 78 | 01111000 |
| 24 | 18 | Feature support(stanby,suspend,RGB color/Prefer Time) | CA | 11001010 |
| 25 | 19 | Red/Green Low bit(RxRy/GxGy) | 03 | 00000011 |
| 26 | 1A | Blue/White Low bit(BxBy/WxWy) | 50 | 01010000 |
| 27 | 1B | Red X(Rx) (written value “ ”) | 94 | 10010100 |
| 28 | 1C | Red Y(Ry) (written value “ ”) | 53 | 01010011 |
| 29 | 1D | Green X(Gx) (written value “ ”) | 4D | 01001101 |
| 30 | 1E | Green Y(Gy) (written value “ ”) | 8B | 10001011 |
| 31 | 1F | Blue X(Bx) (written value “ ”) | 26 | 00100110 |
| 32 | 20 | Blue Y(By) (written value “ ”) | 20 | 00100000 |
| 33 | 21 | White X(Wx) (written value “ ”) | 50 | 01010000 |
| 34 | 22 | White Y(Wy) (written value “ ”) | 54 | 01010100 |
| 35 | 23 | Established timings 1 (800×600@60Hz) | 00 | 00000000 |
| 36 | 24 | Established timings 2 (1024×768@60Hz) | 08 | 00001000 |
| 37 | 25 | Established timings 3(Manufacture’s reserved timing) | 00 | 00000000 |
| 38 | 26 | Standard timing ID1 (Horizontal active pixels) | 61 | 01100001 |
| 39 | 27 | Standard timing ID1 (Aspect ratio 4:3) (Refresh Rate 60Hz-60=0) | 40 | 01000000 |

| | | | | |
|---|---|---|---|---|
| 40 | 28 | Standard timing ID2 | 01 | 00000001 |
| 41 | 29 | Standard timing ID2 | 01 | 00000001 |
| 42 | 2A | Standard timing ID3 | 01 | 00000001 |
| 43 | 2B | Standard timing ID3 | 01 | 00000001 |
| 44 | 2C | Standard timing ID4 | 01 | 00000001 |
| 45 | 2D | Standard timing ID4 | 01 | 00000001 |
| 46 | 2E | Standard timing ID5 | 01 | 00000001 |
| 47 | 2F | Standard timing ID5 | 01 | 00000001 |
| 48 | 30 | Standard timing ID6 | 01 | 00000001 |
| 49 | 31 | Standard timing ID6 | 01 | 00000001 |
| 50 | 32 | Standard timing ID7 | 01 | 00000001 |
| 51 | 33 | Standard timing ID7 | 01 | 00000001 |
| 52 | 34 | Standard timing ID8 | 01 | 00000001 |
| 53 | 35 | Standard timing ID8 | 01 | 00000001 |
| 54 | 36 | Detailed timing descriptor#1 fck/10000 | 64 | 01100100 |
| 55 | 37 | #1 fck | 19 | 00011001 |
| 56 | 38 | #1 Horizontal active | 00 | 00000000 |
| 57 | 39 | #1 Horizontal blanking | 40 | 01000000 |
| 58 | 3A | #1 Horizontal active/Horizontal blanking | 41 | 01000001 |
| 59 | 3B | #1 Vertical active | 00 | 00000000 |
| 60 | 3C | #1 Vertical blanking | 26 | 00100110 |
| 61 | 3D | #1 Vertical active/Vertical blanking | 30 | 00110000 |
| 62 | 3E | #1 Horizontal sync , offset | 0C | 00001100 |
| 63 | 3F | #1 Horizontal sync , width | 88 | 10001000 |
| 64 | 40 | #1 Vertical sync.offset / Vertical sync.width | 36 | 00110110 |
| 65 | 41 | #1 Horizontal sync offset/width/Vertical sync offset/width | 00 | 00000000 |
| 66 | 42 | #1 Horizontal image size | 30 | 00110000 |
| 67 | 43 | #1 Vertical image size | E4 | 11100100 |
| 68 | 44 | #1 Horizontal image size / Vertical image size | 10 | 00010000 |
| 69 | 45 | Horizontal boader | 00 | 00000000 |
| 70 | 46 | Vertical boader | 00 | 00000000 |
| 71 | 47 | Flags(Non-interlaced/Horizontal polarity/Vertical polarity) | 18 | 00011000 |
| 72 | 48 | Detailed timing descriptor #2 | 00 | 00000000 |
| 73 | 49 | Flag | 00 | 00000000 |
| 74 | 4A | Reserved | 00 | 00000000 |
| 75 | 4B | Dummy Descriptor | 10 | 00010000 |
| 76 | 4C | Flag | 00 | 00000000 |
| 77 | 4D | 1st dummy | 00 | 00000000 |
| 78 | 4E | 2nd dummy | 00 | 00000000 |
| 79 | 4F | 3rd dummy | 00 | 00000000 |
| 80 | 50 | 4th dummy | 00 | 00000000 |
| 81 | 51 | 5th dummy | 00 | 00000000 |
| 82 | 52 | 6th dummy | 00 | 00000000 |
| 83 | 53 | 7th dummy | 00 | 00000000 |

| | | | | |
|---|---|---|---|---|
| 84 | 54 | 8th dummy | 00 | 00000000 |
| 85 | 55 | 9th dummy | 00 | 00000000 |
| 86 | 56 | 10th dummy | 00 | 00000000 |
| 87 | 57 | 11th dummy | 00 | 00000000 |
| 88 | 58 | New line character #2 indicates end | 0A | 00001010 |
| 89 | 59 | Padding with “blank” character | 20 | 00100000 |
| 90 | 5A | Detailed timing descriptor #3 | 00 | 00000000 |
| 91 | 5B | Flag | 00 | 00000000 |
| 92 | 5C | Reserved | 00 | 00000000 |
| 93 | 5D | Dummy Descriptor | 10 | 00010000 |
| 94 | 5E | Flag | 00 | 00000000 |
| 95 | 5F | 1st Dummy | 00 | 00000000 |
| 96 | 60 | 2nd Dummy | 00 | 00000000 |
| 97 | 61 | 3rd Dummy | 00 | 00000000 |
| 98 | 62 | 4th Dummy | 00 | 00000000 |
| 99 | 63 | 5th Dummy | 00 | 00000000 |
| 100 | 64 | 6th Dummy | 00 | 00000000 |
| 101 | 65 | 7th Dummy | 00 | 00000000 |
| 102 | 66 | 8th Dummy | 00 | 00000000 |
| 103 | 67 | 9th Dummy | 00 | 00000000 |
| 104 | 68 | 10th Dummy | 00 | 00000000 |
| 105 | 69 | 11th Dummy | 00 | 00000000 |
| 106 | 6A | New line character #3 indicates end | 0A | 00001010 |
| 107 | 6B | Padding with “blank” character | 20 | 00100000 |
| 108 | 6C | Detailed timing descriptor #4 | 00 | 00000000 |
| 109 | 6D | Flag | 00 | 00000000 |
| 110 | 6E | Reserved | 00 | 00000000 |
| 111 | 6F | Dummy descriptor | 10 | 00010000 |
| 112 | 70 | Flag | 00 | 00000000 |
| 113 | 71 | 1st Dummy | 00 | 00000000 |
| 114 | 72 | 2nd Dummy | 00 | 00000000 |
| 115 | 73 | 3rd Dummy | 00 | 00000000 |
| 116 | 74 | 4th Dummy | 00 | 00000000 |
| 117 | 75 | 5th Dummy | 00 | 00000000 |
| 118 | 76 | 6th Dummy | 00 | 00000000 |
| 119 | 77 | 7th Dummy | 00 | 00000000 |
| 120 | 78 | 8th Dummy | 00 | 00000000 |
| 121 | 79 | 9th Dummy | 00 | 00000000 |
| 122 | 7A | 10th Dummy | 00 | 00000000 |
| 123 | 7B | 11th Dummy | 00 | 00000000 |
| 124 | 7C | New line character #4 indicates end | 0A | 00001010 |
| 125 | 7D | Padding with “blank” character | 20 | 00100000 |
| 126 | 7E | Extension flag | 00 | 00000000 |
| 127 | 7F | Checksum | 5A | 01011010 |

10. Optical Characteristics

Ta=25°C, Vcc=+3.3V

| Parameter | | Symbol | Condition | Min. | Typ. | Max. | Unit | Remark |
|---|---|---|---|---|---|---|---|---|
| Viewing angle range | Horizontal | θ21, θ22 | CR>10 | 45 | — | — | Deg. | 【Note1,4】 |
| | Vertical | θ11 | | 10 | — | — | Deg. | |
| | | θ12 | | 30 | — | — | Deg. | |
| Contrast ratio | | CRn | θ=0° | 150 | — | — | | 【Note2,4】 |
| | | CRo | Optimum viewing angle | — | 300 | — | | |
| Response time | Rise | τr | θ=0° | — | 15 | | ms | 【Note3,4】 |
| | Decay | τd | | — | 30 | | ms | |
| Chromaticity of white | | x | | — | 0.313 | — | | 【Note4】 |
| | | y | | — | 0.329 | — | | |
| Luminance of white 【Note4】 | | $Y_L$ | | 120 | 150 | — | cd/m² | $I_L$ = 6.0mArms $F_L$=60kHz |
| White Uniformity | | $\delta_W$ | | — | — | 1.45 | | 【Note5】 |

※ The measurement shall be executed 30 minutes after lighting at rating. (condition : $I_L$ =6.0mArms)

The optical characteristics shall be measured in a dark room or equivalent state with the method shown in Fig.3 below.

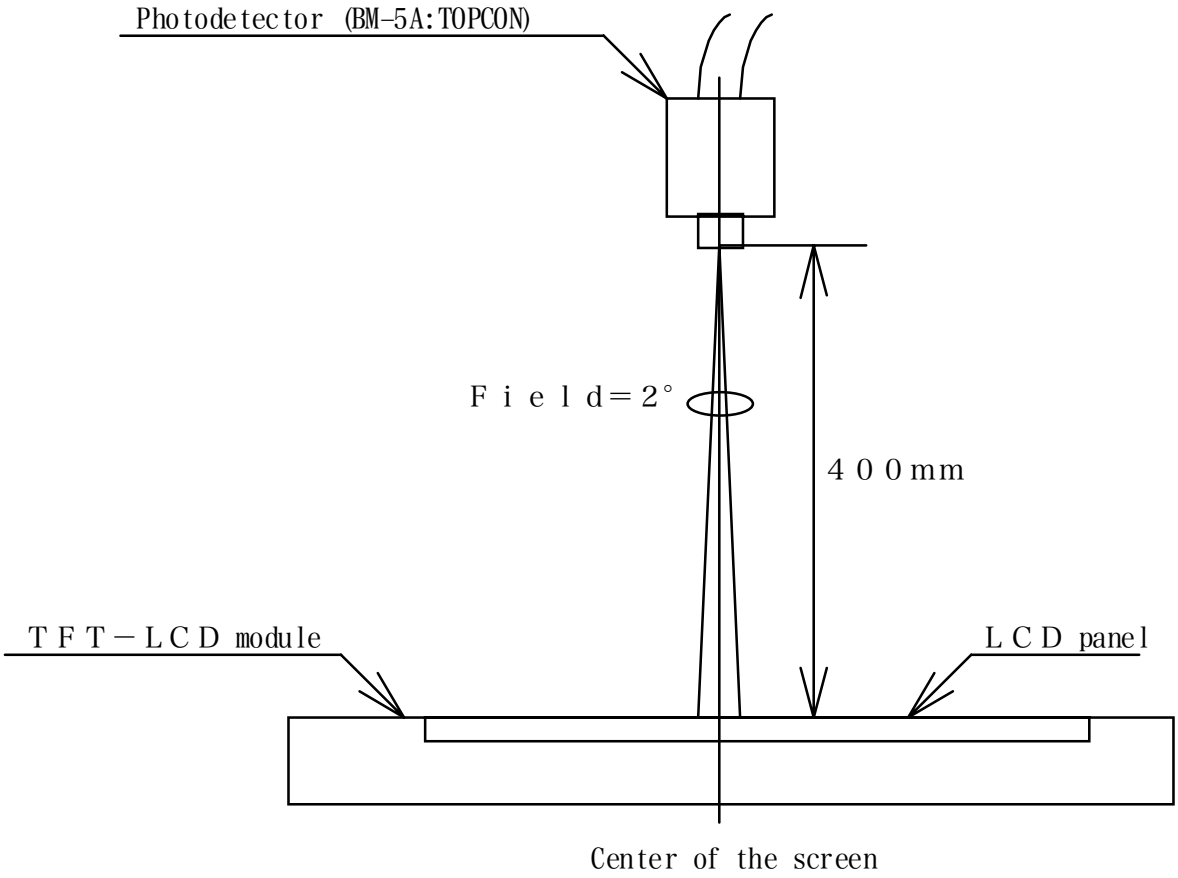


Fig.3 Optical characteristics measurement method

【Note1】Definitions of viewing angle range:

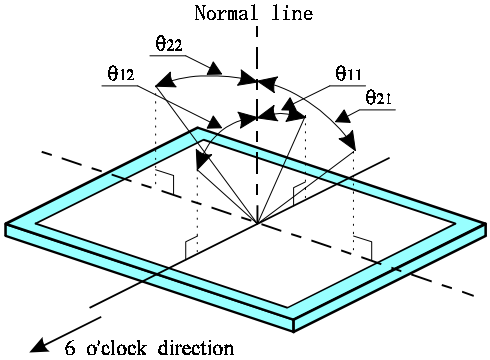


【Note2】Definition of contrast ratio:

The contrast ratio is defined as the following.

$$\text{Contrast Ratio (CR)} = \frac{\text{Luminance (brightness) with all pixels white}}{\text{Luminance (brightness) with all pixels black}}$$

【Note3】Definition of response time:

The response time is defined as the following figure and shall be measured by switching the input signal for "black" and "white" .

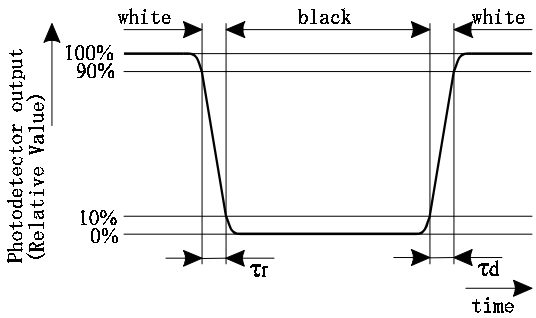


【Note4】This shall be measured at center of the screen.

【Note5】Definition of white uniformity:

White uniformity is defined as the following with five measurements (A～E).

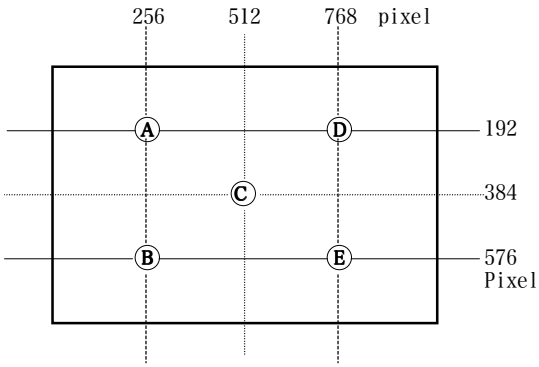


$$\delta W = \frac{\text{Maximum Luminance of five points (brightness)}}{\text{Minimum Luminance of five points (brightness)}}$$

11. Display Quality

The display quality of the color TFT-LCD module shall be in compliance with the Incoming Inspection Standard.

12. Handling Precautions

a) Be sure to turn off the power supply when inserting or disconnecting the cable.

b) Be sure to design the cabinet so that the module can be installed without any extra stress such as warp or twist.

c) Since the front polarizer is easily damaged, pay attention not to scratch it.

d) Wipe off water drop immediately. Long contact with water may cause discoloration or spots.

e) When the panel surface is soiled, wipe it with absorbent cotton or other soft cloth.

f) Since the panel is made of glass, it may break or crack if dropped or bumped on hard surface. Handle with care.

g) Since CMOS LSI is used in this module, take care of static electricity and injure the human earth when handling.

h) Observe all other precautionary requirements in handling components.

i) This module has its circuitry PCBs on the rear side and should be handled carefully in order not to be stressed.

j) Laminated film is attached to the module surface to prevent it from being scratched . Peel the film off slowly just before the use with strict attention to electrostatic charges. Ionized air shall be blown over during the action. Blow off the 'dust' on the polarizer by using an ionized nitrogen gun, etc..

k) Duaring the module aging , don't put protection film on the module surface.

l) When handling LCD modules and assembling them into cabinets, please be noted that long-term storage in the environment of oxidization or deoxidization gas and the use of such materials as reagent, solvent, adhesive, resin, etc. which generate these gasses, may cause corrosion and discoloration of the LCD modules.

13. Packing form

a) Piling number of cartons : MAX.5

b) Package quantity in one carton : 10pcs

c) Carton size : 434 (W) × 340 (D) × 282 (H) mm

d) Total mass of one carton filled with full modules : 5950 g

Packing form is shown in Fig.2

14. Reliability test items

| No. | Test item | Conditions |
|---|---|---|
| 1 | High temperature storage test | Ta = 60℃ 240h |
| 2 | Low temperature storage test | Ta = -25℃ 240h |
| 3 | High temperature<br>& high humidity operation test | Ta = 40℃ ; 95 %RH 240h<br>(No condensation) |
| 4 | High temperature operation test | Ta = 50℃ 240h<br>(The panel temp. must be less than 60℃) |
| 5 | Low temperature operation test | Ta = 0℃ 240h |
| 6 | Vibration test<br>(non- operating) | Frequency : 10～57Hz/Vibration width (one side):0.075mm<br>: 58～500Hz/Gravity:9.8m/s$^2$<br>Sweep time : 11 minutes<br>Test period : 3 hours<br>(1 hour for each direction of X,Y,Z) |
| 7 | Shock test<br>(non- operating) | Max. gravity : 490 m/s$^2$<br>Pulse width : 11 ms, sine wave<br>Direction : ±X,±Y,±Z<br>once for each direction. |

15. Others

1) Lot No. Label:


2) Adjusting volume have been set optimally before shipment, so do not change any adjusted value. If adjusted value is changed, the specification may not be satisfied.

3) Disassembling the module can cause permanent damage and should be strictly avoided.

4) Please be careful since image retention may occur when a fixed pattern is displayed for a long time.

5) If any problem occurs in relation to the description of this specification , it shall be resolved through discussion with spirit of cooperation.

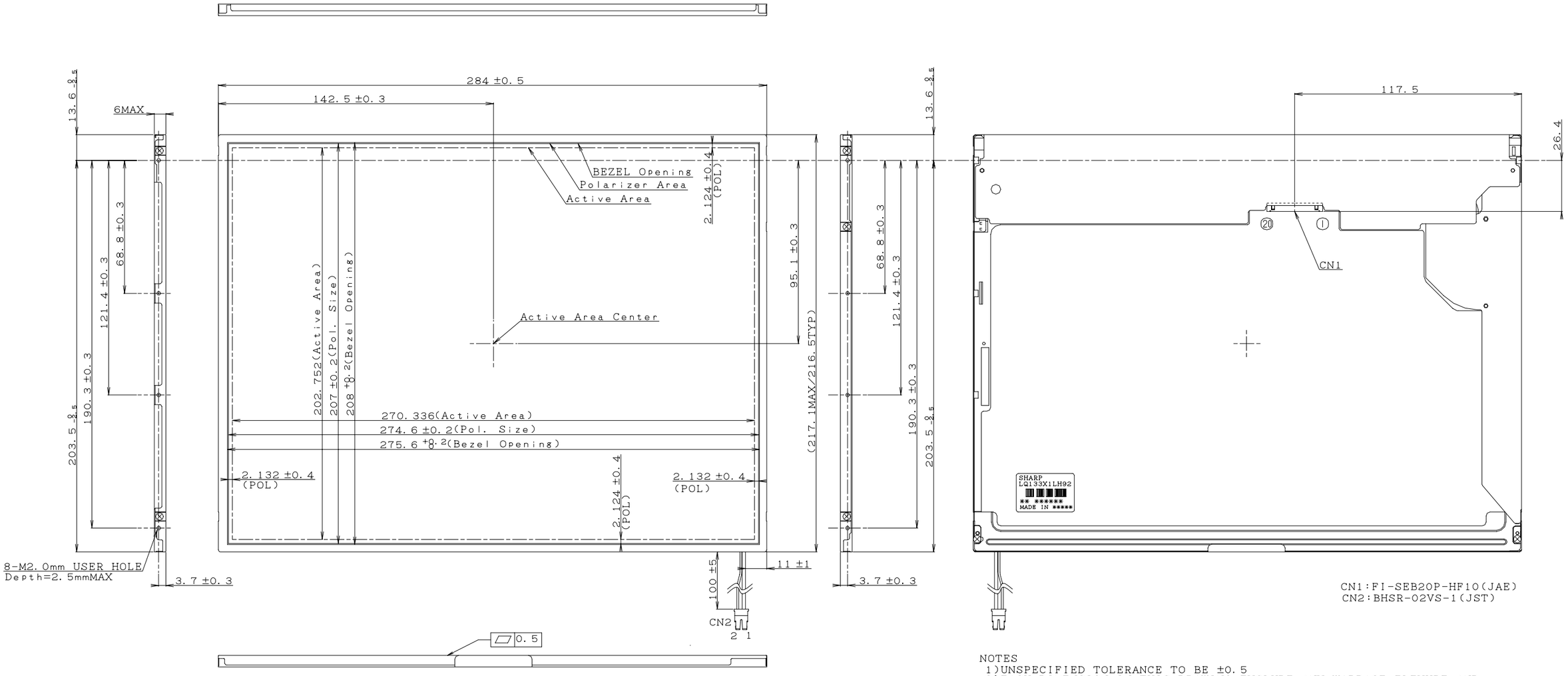


CN1 Pin Assign

| | |
|---|---|
| 20 | DATAedid |
| 19 | CLKedid |
| 18 | RESERVED |
| 17 | Vedid |
| 16 | GND |
| 15 | RXCLKIN+ |
| 14 | RXCLKIN- |
| 13 | GND |
| 12 | RXIN 2+ |
| 11 | RXIN 2- |
| 10 | GND |
| 9 | RXIN 1+ |
| 8 | RXIN 1- |
| 7 | GND |
| 6 | RXIN 0+ |
| 5 | RXIN 0- |
| 4 | GND |
| 3 | GND |
| 2 | VCC |
| 1 | VCC |

CN2:BHSR-02VS-1

| | |
|---|---|
| 1 | High |
| 2 | GND |

NOTES
1)UNSPECIFIED TOLERANCE TO BE ±0.5
2)EACH DIMENSION IN THIS DRAWING EXCLUDE ANY WARPAGE.FLEXURE AND TRANSFORMATION OF COVER.PCB.AND OTHER COMPONENTS OF MODULE.

Fig. 1 OUTLINE DIMENSIONS

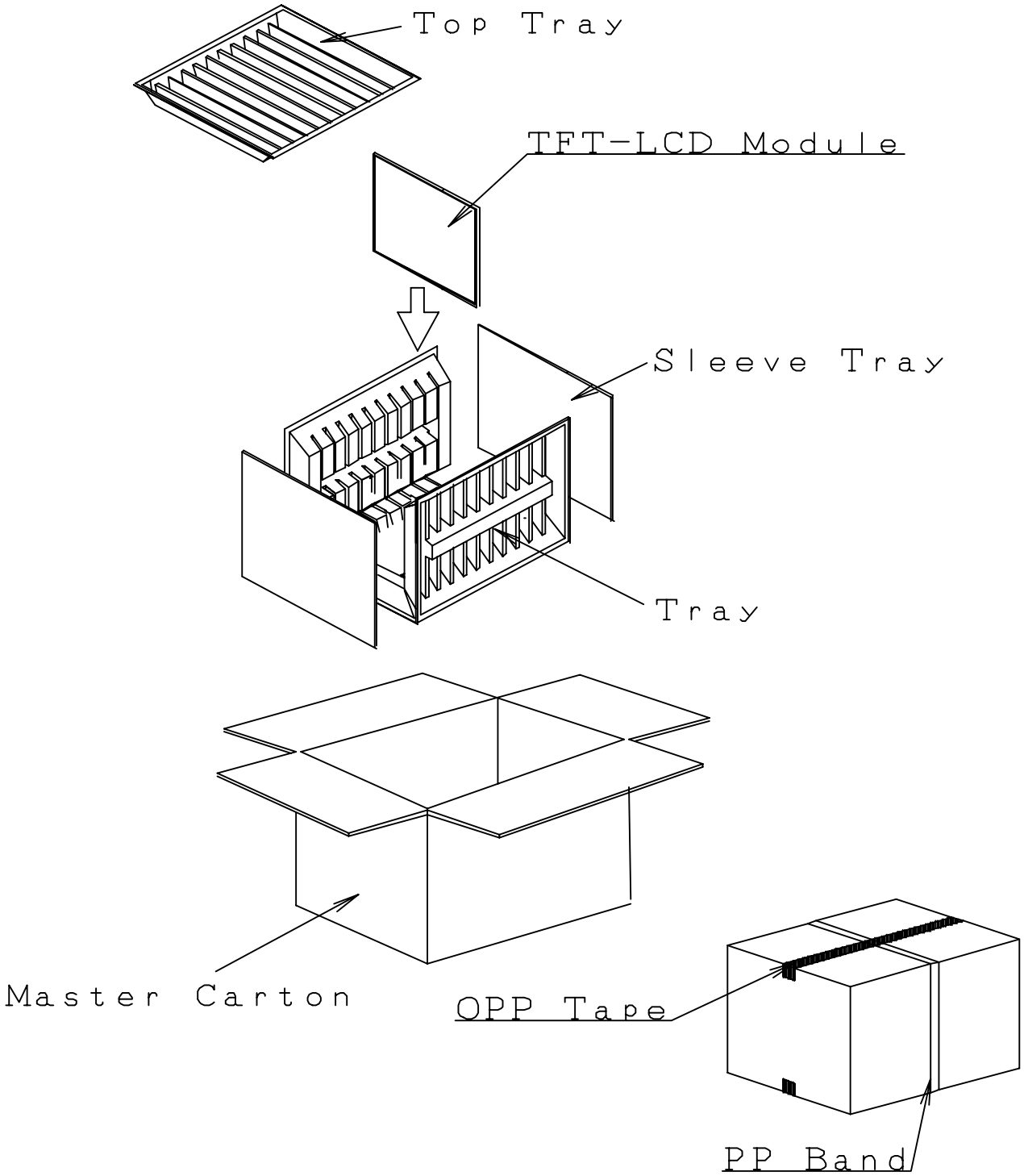


Fig.2 Packing form