TOTTSAN

ENGINEERING SPECIFICATIONS

TFT COLOR LCD MODULE

TM290WX-71N31

- 74cm (29.0 inch) diagonal
- XGA-Wide resolution (1280 x 768 pixels)
- Wide View Angle (SVA)
- LVDS Interface (RGB x 8 bits x 2channels)
- Display Color: 16,777,216 colors (8bits)
- With CFL backlight unit and Inverter
- Nonglare surface type

(PRELIMINARY)

Ver.3 Jan. 30, 2002

Tottori SANYO Electric Co., Ltd.
Electronic Device Business Headquarters
LCD Tottori Division

3-201, Minami-yoshikata, Tottori, 680-8634 Japan
TEL: 81-857-21-2941, 1958
FAX: 81-857-21-2162

T. Fujita

Department Manager T. FUJITA

Rembutsu

Engineering Manager K. REMBUTSU

NOTICES

1. The contents stated in this document and the product may be subject to change without prior notice.
   When you kindly study to use this product, please ask our distributor or us for the latest information.
2. This product is developed and produced for usage onto normal electronic products (office automation equipments, communication peripherals, electric appliance products, game machines, etc.) and is not suitable for applications which need extremely high reliability and extreme safety (aero- or space-use machines, control equipments for nuclear power, life keeping equipments, etc.).
3. This document shall not grant or guarantee any right to adapt intellectual property or any other patents of third party.
4. Please use this product correctly according to operating conditions and precautions for use stated in this document.
   Please install safety proof in your designing to avoid human accident, fire accident and social damage, which may be resulted from malfunction of this product.
5. This product is not designed to withstand against radiant rays.
6. It is strictly prohibited to copy or publish a part or whole of this document without our prior written approval.

REVISION HISTORY

DATE	REVISION NO.	PAGE	DESCRIPTIONS
Oct. 31, 01	Ver. 1	-	Initial Release
Nov. 28, 01	Ver. 2	2	MCHANICAL CHARACTERISTICS ELECTRICAL ABSOLUTE MAXIMUM RATINGS
		3	ELECTRICAL CHARACTERISTICS
		6	BLOCK DIAGRAM (Changed BLCN2, added BLCN3)
		8	INTERFACE PIN CONNECTIONS (Changed BLCN2, added CN2 and BLCN3)
		11	INTERFACE (LVDS) SIGNAL TIMING PARAMETERS CYCLE JITTER of LVDS CLOCK
		12	INTERFACE SIGNAL TIMING PARAMETERS (DE_MODE)
		14	POWER ON/OFF SEQUENCE REQUIREMENT
		15-18	PRECAUTIONS
		18	OUTER DIMEMSIONS (Moved stud position)
Jan. 30, 02	Ver. 3	2	MCHANICAL CHARACTERISTICS Thickness and Weight
		3	ELECTRICAL CHARACTERISTICS (Logic) Power supply current IDD
			ELECTRICAL CHARACTERISTICS (Inverter) Power supply current IDDB and Operating frequency fL
		12	INTERFACE SIGNAL TIMING PARAMETERS (DE_MODE) Frequency fCLK of ODCLK and EDCLK
		19	OUTER DIMENSIONS Location and profile of mounting studs, and Thickness

MECHANICAL CHARACTERISTICS

Ta=25°C

ITEM	SPECIFICATION	UNIT
Module size	684.0(W) x 426.5(H) x 41.7 Max.(t)	mm
Resolution	1280 x RGB(W) x 768(H)	pixel
Sub pixel pitch	0.1645(W) x 0.4935(H)	mm
Pixel pitch	0.4935(W) x 0.4935(H)	mm
Active viewing area	631.68(W) x 379.01(H)	mm
Bezel opening area	638.0(W) x 385.6(H)	mm
Weight	(6900) Typ.	g

ELECTRICAL ABSOLUTE MAXIMUM RATINGS

Ta=25°C

ITEM	SYMBOL	MIN	MAX	UNIT	NOTE
Power supply voltage	VDD-VSS	-0.3	6.0	V	Logic
	VDDB-VSS	0.0	17.0	V	Inverter
Input voltage	VI	VSS-0.3	VDD+0.5	V	Logic
	VIB	VSS-0.3	7.0	V	Inverter

ENVIRONMENTAL ABSOLUTE MAXIMUM RATINGS

ITEM	SYMBOL	CONDITIONS	MIN	MAX	UNIT	NOTE
Ambient temperature	TST	Storage	-20	60	°C	Note 1
	TOP	Operation	0	50		
Humidity	-	Ta=40°C max.	-	85	%RH	No condensation Note 2

[Note 1] Care should be taken so that the LCD module may not be subjected to the temperature beyond this specification.

[Note 2] Ta>40°C: Absolute humidity shall be less than that of 85%RH/40°C.

ELECTRICAL CHARACTERISTICS (Logic)

fV=60Hz, Ta=25°C

ITEM	SYMBOL	CONDITIONS	MIN	TYP	MAX	UNIT	NOTE
Power supply voltage	V_{DD}-V_{SS}		4.5	5.0	5.5	V	
Power supply current	I_{DD}	Note 1	-	(850)	(1400)	mA	V_{DD} =5.0V
LVDS input logic voltage	V_{TH}	High level	-	-	+100	mV	V_{CM} =1.2V
	V_{TL}	Low level	-100	-	-		
LVDS input common mode voltage	V_{CM}		1.0	1.2	1.4	V	V_{DD} =5.0V
LVDS input termination resistor	RT		-	100	-	Ω	Internal

[Note 1] Display pattern of typical power supply current is 256 gray scale bar.

ELECTRICAL CHARACTERISTICS (Inverter)

Ta=25°C

ITEM	SYMBOL	CONDITIONS	MIN	TYP	MAX	UNIT	NOTE
Power supply voltage	V_{DDB}-V_{SS}		13.0	14.0	15.0	V	
Power supply current	I_{DDB}	Max. Brightness	(5400)	(6400)	(7400)	mA	V_{DDB} =14.0V
		Min. Brightness	(1000)	(2000)	(3000)		
Operating frequency	f_L	Max. Brightness	(56)	(62)	(68)	kHz	
Backlight ON/OFF control (BLTC) voltage	V_{THBLTC}	Backlight ON	(2.0)	-	(5.0)	V	
	V_{TLBLTC}	Backlight OFF	(0.0)	-	(0.8)		
Backlight ON/OFF control (BLTC) current	I_{BLTC}		(-1.0)	-	(1.5)	mA	
Backlight brightness control (BRT2) Voltage	V_{THBRT2}	Max. Brightness	-	(1.0)	-	V	
	V_{TLBRT2}	Min. Brightness	-	(0.0)	-		
Backlight brightness control (BRT2) current	I_{BRT2}		(-1.0)	-	(1.5)	mA	

[Note 1] The measurement is a result after 15 minutes of lighting

[Note 2] The current capacity of power source should be 20A or higher. When power source capacity is lower than the 20A, the protector circuit in inverter may not operate in case of a trouble.

[Note 3] The inverter generates heat at Backlight ON and causes temperature rise. Therefore, take necessary a heat radiating design to meet the specified operating temperature range for LCD module inside your system.

[Note 4] Details of the functions of Backlight ON/OFF control (BLTC) and Backlight brightness control (BRT1 and BRT2) are mentioned in the terms of ***BACKLIGHT ON/OFF CONTROL FUNCTIONS (Inverter)*** and ***BRIGHTNESS CONTROL FUNCTIONS (Inverter)***.

[Note 5] Backlight driving conditions (lamp operating frequency f_L especially) may interfere with horizontal frequency f_H, causing the beat or flicker on the display. Therefore the horizontal frequency f_H shall be adjusted in relation to lamp operating frequency f_L to avoid interference.

ELECTRICAL CHARACTERISTICS (Lamp)

This module has the direct type backlight with 16 cold cathode fluorescent Lamps (CCFL). The characteristics of single Lamp as shown below.

Ta=25°C

ITEM	SYMBOL	CONDITIONS	MIN	TYP	MAX	UNIT	NOTE
Lamp Life	t_{OL}	TBD	TBD	-	-	hrs	

OPTICAL CHARACTERISTICS

V_{DD}=5.0V, fv=60Hz, Ta=25 C

ITEM		SYMBOL	CONDITIONS		MIN	TYP	MAX	UNIT	NOTE
Brightness		B	ϕ = 0°		-	(450)	-	cd/m²	Note 5,
Brightness uniformity		δB	ϕ = 0°		-	-	(1.45)	-	Note 5,
Contrast ratio		CR	ϕ = 0°		-	(600)	-	-	Note 2, 7
Viewing angle range		ϕ	CR>10	θ = 0°	-	(85)	-	deg.	Note 1, 4,
				θ = 90°	-	(85)	-		
				θ =180°	-	(85)	-		
				θ =270°	-	(85)	-		
Response time	Rise	tr	ϕ =0°		-	(14)	-	ms.	Note 3, 7
	Fall	tf			-	(8)	-		
Color of CIE Coordinate	Red	x	ϕ =0°		-	TBD	-	-	Note 4,
		y			-	TBD	-		
	Green	x			-	TBD	-		
		y			-	TBD	-		
	Blue	x			-	TBD	-		
		y			-	TBD	-		
	White	x			-	(0.313)	-		
		y			-	(0.329)	-		
Color gamut		C	ϕ=0°, to NTSC		-	(72)	-	%	Note 4,

[Note 1] Definition of "ϕ" and "θ"

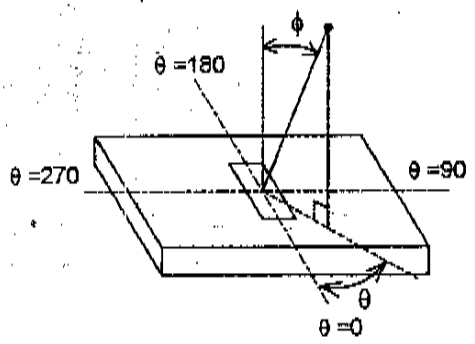

[Note 2] Definition of contrast ratio "CR"

$$CR = \frac{\text{Brightness at White}}{\text{Brightness at Black}}$$

[Note 3] Definition of response time "tr" and "tf"

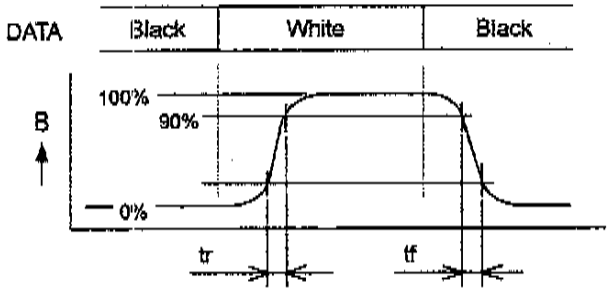

[Note 4] This shall be measured at center (point No.3 shown in Note 6).

[Note 5] The brightness shall be the average of five points shown in Note 6.

[Note 6] Measurement points

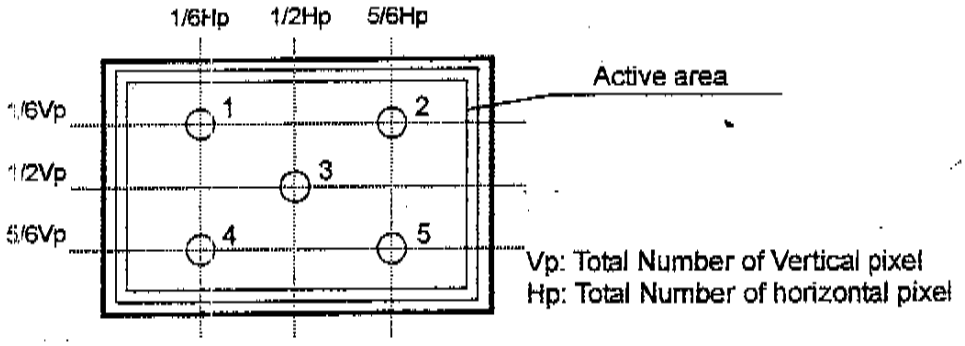

[Note 7] Measurement condition

(1) Measurement equipment: BM-5A (TOPCON Corp.), Field=2°
(2) Ambient temperature Ta: 25±2°C
(3) LCD: All pixels are WHITE, VIN=5.0V, fV=60Hz
(4) Measure after 30 minutes of Lamp warm up.
(5) Inverter input: TBD

BLOCK DIAGRAM

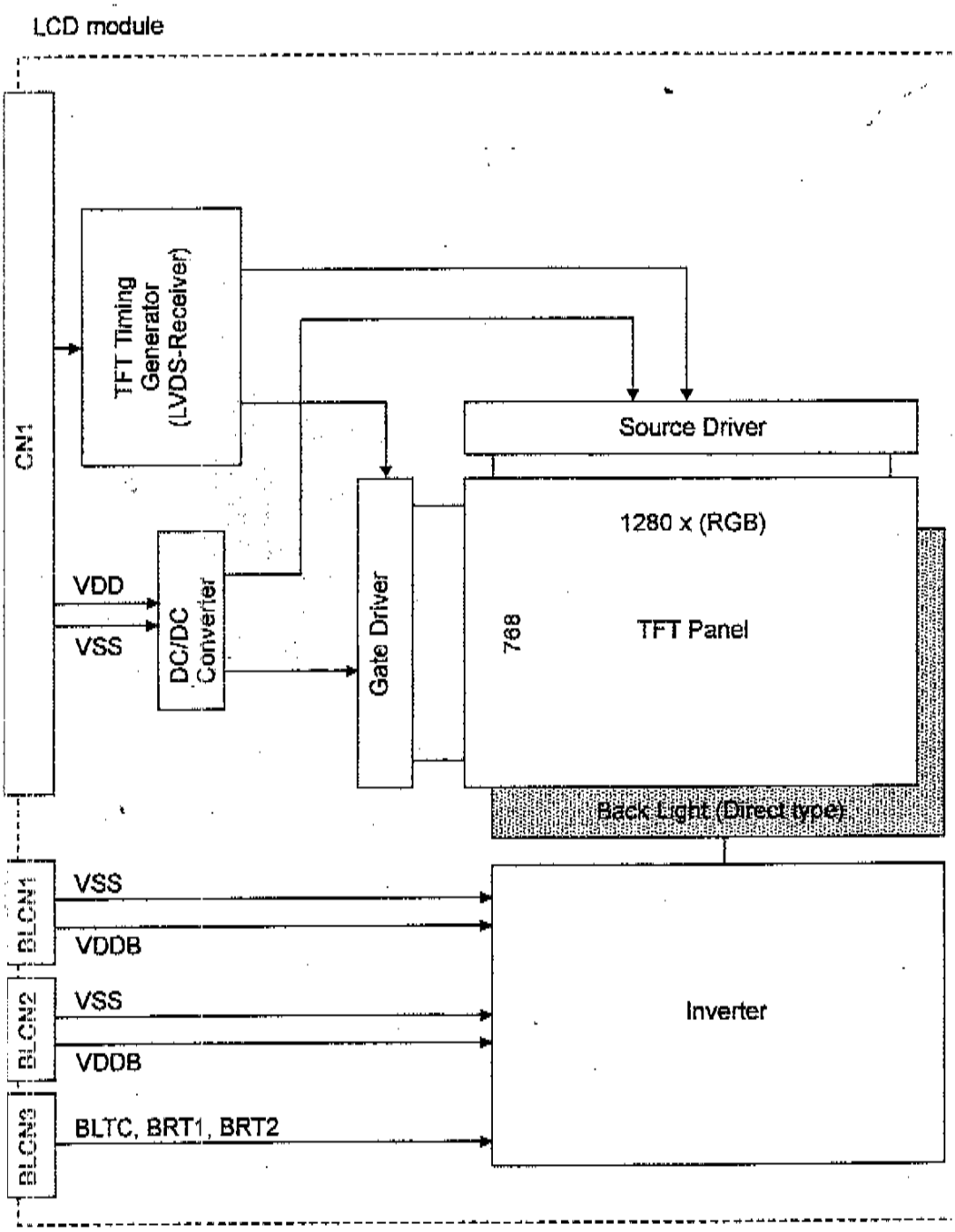

INTERFACE (LVDS) ODD DATA ASSIGNMENT

ORin0 +/-	Rxout 7 OG0 (LSB)	Rxout 6 OR5	Rxout 4 OR4	Rxout 3 OR3	Rxout 2 OR2	Rxout 1 OR1	Rxout 0 OR0 (LSB)
ORin1 +/-	Rxout 18 OB1	Rxout 15 OB0 (LSB)	Rxout 14 OG5	Rxout 13 OG4	Rxout 12 OG3	Rxout 9 OG2	Rxout 8 OG1
ORin2 +/-	Rxout 26 DE	Rxout 25 VSYNC	Rxout 24 HSYNC	Rxout 22 OB5	Rxout 21 OB4	Rxout 20 OB3	Rxout 19 OB2
ORin3 +/-	Rxout 23 RESERVED	Rxout 17 OB7 (MSB)	Rxout 16 OB6	Rxout 11 OG7 (MSB)	Rxout 10 OG6	Rxout 5 OR7 (MSB)	Rxout 27 OR6
ORCLK +/-			X			X	

INTERFACE ODD SIGNALS

SYMBOL	FUNCTION
ODCLK	Odd Data Clock
HSYNC	Horizontal Sync - This signal initiates a new line (negative).
VSYNC	Vertical Sync - This signal initiates a new frame (negative).
DE	Data Enable (positive)
OR0	Odd Red Data (LSB)
OR1	Odd Red Data
OR2	Odd Red Data
OR3	Odd Red Data
OR4	Odd Red Data
OR5	Odd Red Data
OR6	Odd Red Data
OR7	Odd Red Data (MSB)
OG0	Odd Green Data (LSB)
OG1	Odd Green Data
OG2	Odd Green Data
OG3	Odd Green Data
OG4	Odd Green Data
OG5	Odd Green Data
OG6	Odd Green Data
OG7	Odd Green Data (MSB)
OB0	Odd Blue Data (LSB)
OB1	Odd Blue Data
OB2	Odd Blue Data
OB3	Odd Blue Data
OB4	Odd Blue Data
OB5	Odd Blue Data
OB6	Odd Blue Data
OB7	Odd Blue Data (MSB)

[Note 1] The valid synchronous signals are ODCLK and DE, HSYNC and VSYNC are invalid.

[Note 2] INTERFACE SIGNALS are loaded from LVDS-transmitter to TFT Timing generator with LVDS sequence. (See ***BLOCK DIAGRAM***.)

INTERFACE (LVDS) EVEN DATA ASSIGNMENT

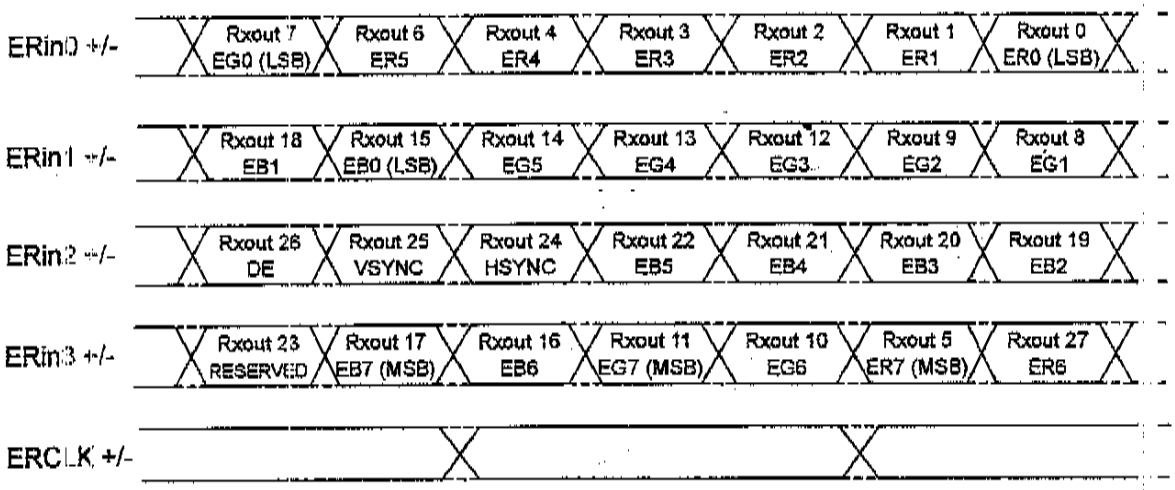

INTERFACE EVEN SIGNALS

SYMBOL	FUNCTION
EDCLK	Even Data Clock
ER0	Even Red Data (LSB)
ER1	Even Red Data
ER2	Even Red Data
ER3	Even Red Data
ER4	Even Red Data
ER5	Even Red Data
ER6	Even Red Data
ER7	Even Red Data (MSB)
EG0	Even Green Data (LSB)
EG1	Even Green Data
EG2	Even Green Data
EG3	Even Green Data
EG4	Even Green Data
EG5	Even Green Data
EG6	Even Green Data
EG7	Even Green Data (MSB)
EB0	Even Blue Data (LSB)
EB1	Even Blue Data
EB2	Even Blue Data
EB3	Even Blue Data
EB4	Even Blue Data
EB5	Even Blue Data
EB6	Even Blue Data
EB7	Even Blue Data (MSB)

[Note 1] INTERFACE SIGNALS are loaded from LVDS-transmitter to TFT Timing generator with LVDS sequence. (See ***BLOCK DIAGRAM***.)

INTERFACE (LVDS) SIGNAL TIMING PARAMETERS

PARAMETER	SYMBOL	MIN	TYP	MAX	UNIT	NOTE
Data Setup Time	tsu	900	-	-	ps	at Tin=25ns
Data Hold Time	thd	900	-	-	ps	Note 1

[Note 1] In the following timing waveform, the n-th edge of internal imaginary clock tcn, which is sampling position of LVDS input data signal, is given by:

$$tcn = (2n-1)\ Tin / 14 \qquad (n=1,2,\cdots 7)$$

where Tin is period of LVDS input clock.
For this imaginary clock edge, data setup time is tsu and data hold time is th respectively.

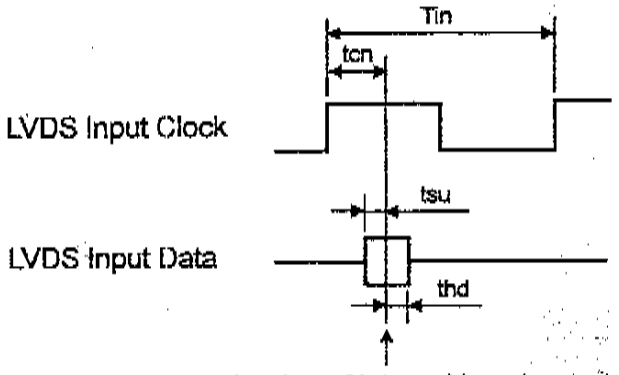

n-th edge of internal imaginary clock (data sampling position)

CYCLE JITTER of LVDS CLOCK

PARAMETER	SYMBOL	MIN	TYP	MAX	UNIT	NOTE
P-P of jitter / 100 cycles	tcj1	-	-	300	ps	Note 1
Jitter rate	tcj2	-	-	20	ps/cycle	

[Note 1] Please confirm tcj2 (Jitter rate), only if tcj1 (P-P of jitter/100cycles) exceeds 300ps

[Additional explanation]

Right diagram shows the example of CYCLE JITTER of LVDS CLOCK.

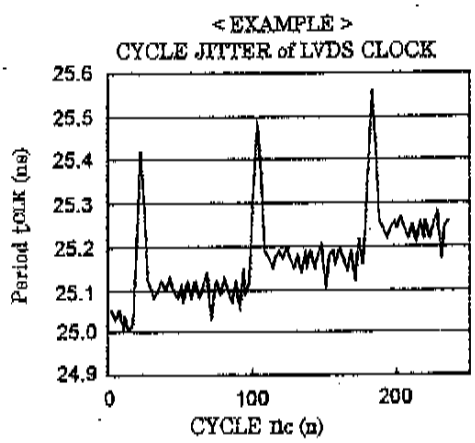

According to this diagram, tCLK MIN. is 25.00ns and tCLK MAX. is 25.42ns between 0nc and 100nc. The tcj1 (P-P of jitter / 100 cycles) in this sphere is

tcj1=25.42-25.00=0.42 ns

and out of specification (300ps MAX.).
So, it is neccesary to measure tcj2 (jitter rate) and to judge whether it conform to above specification.

According to the diagram, the sharpest fluctuation of tCLK is 0.4ns per 5nc. So that, the tcj2 in this sphere is

tcj2=0.4/5=0.08 ns/cycle

and larger than specification (20ps/cycle MAX.).

In conclusion, normal function of the LCD module can not be assured in this case.

INTERFACE SIGNAL TIMING PARAMETERS (DE_MODE)

PARAMETER		SYMBOL	MIN	TYP	MAX	UNIT	NOTE
CDCLK EDCLK	Frequency	f_{CLK}	(30)	40.2	(45)	MHz	
	Duty	D	(0.40)	(0.50)	(0.60)	-	$D=t_{CLKL}/t_{CLK}$
DE	Setup Time	t_{SI}	(3)	-	-	ns	for DCLK
	Hold Time	t_{HI}	(1.5)	-	-	ns	
	Horiz. Period	t_{HP}	690	832	1026	t_{CLK}	
	Horiz. DE	t_{HDE}	640	640	TBD	t_{CLK}	
	Vert. Period	t_{VP}	780	806	900	t_{HP}	fv=60Hz Typ.
	Vert. DE	n_{VDE}	768	768	TBD	n	
DATA	Setup Time	t_{SD}	(3)	-	-	ns	for DCLK
	Hold Time	t_{HD}	(1.5)	-	-	ns	

[Note 1] f_H (Horizontal Frequency) = $1/t_{HP}$
fv (Vertical Frequency) = $1/t_{VP}$

[Note 2] These signal timing parameters are specified at the digital inputs of LVDS transmitter.

INTERFACE SIGNAL TIMING DIAGRAM (DE_MODE)

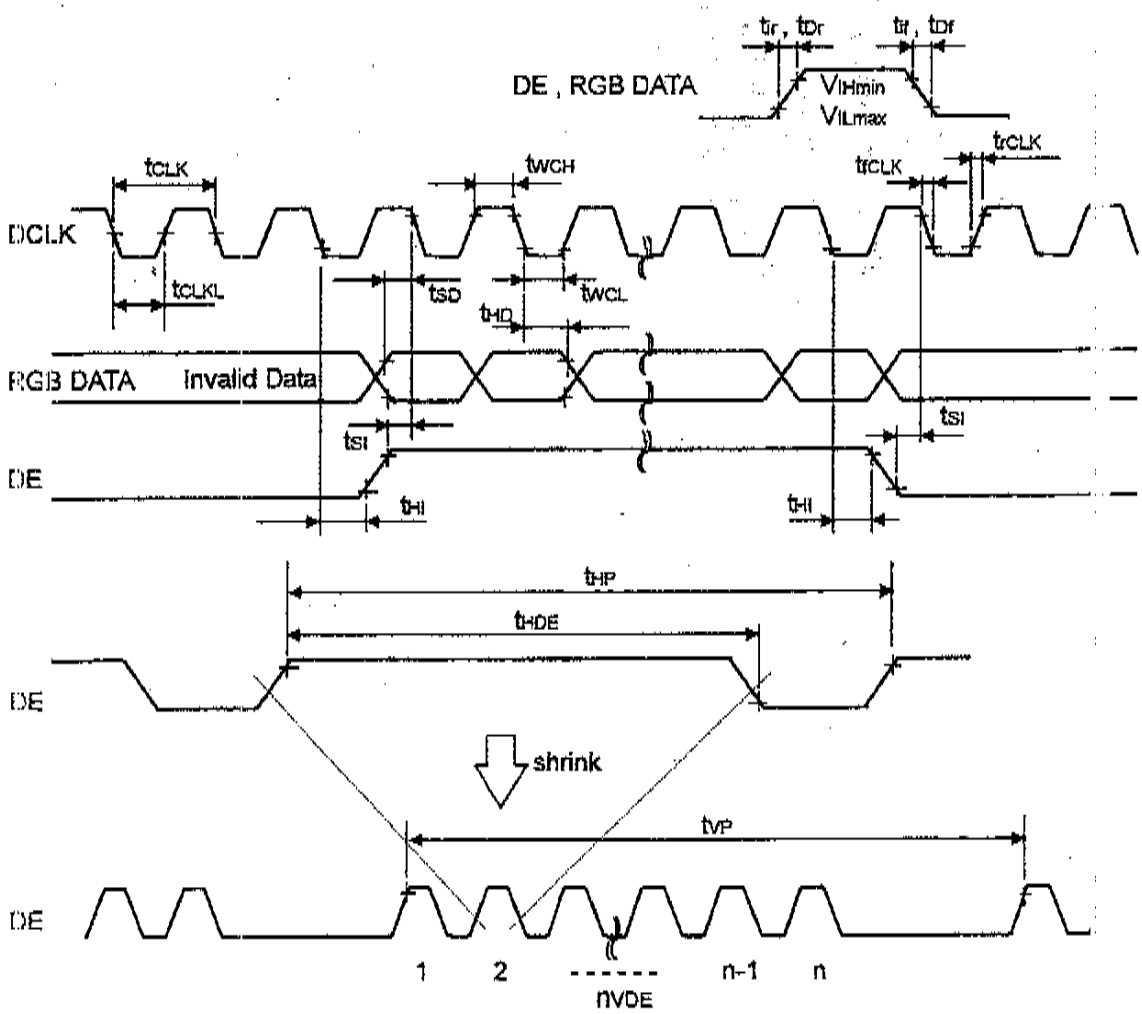

RELATIONSHIP BETWEEN INPUT DATA AND DISPLAY COLOR

DISPLAY COLOR \ INPUT DATA		RED DATA								GREEN DATA								BLUE DATA							
		MSB							LSB	MSB							LSB	MSB							LS
		OR7	OR6	OR5	OR4	OR3	OR2	OR1	OR0	OG7	OG6	OG5	OG4	OG3	OG2	OG1	OG0	OB7	OB6	OB5	OB4	OB3	OB2	OB1	OB
		ER7	ER6	ER5	ER4	ER3	ER2	ER1	ER0	EG7	EG6	EG5	EG4	EG3	EG2	EG1	EG0	EB7	EB6	EB5	EB4	EB3	EB2	EB1	EB
BASIC COLOR	BLACK	L	L	L	L	L	L	L	L	L	L	L	L	L	L	L	L	L	L	L	L	L	L	L	L
	RED(255)	H	H	H	H	H	H	H	H	L	L	L	L	L	L	L	L	L	L	L	L	L	L	L	L
	GREEN(255)	L	L	L	L	L	L	L	L	H	H	H	H	H	H	H	H	L	L	L	L	L	L	L	L
	BLUE(255)	L	L	L	L	L	L	L	L	L	L	L	L	L	L	L	L	H	H	H	H	H	H	H	H
	CYAN	L	L	L	L	L	L	L	L	H	H	H	H	H	H	H	H	H	H	H	H	H	H	H	H
	MAGENTA	H	H	H	H	H	H	H	H	L	L	L	L	L	L	L	L	H	H	H	H	H	H	H	H
	YELLOW	H	H	H	H	H	H	H	H	H	H	H	H	H	H	H	H	L	L	L	L	L	L	L	L
	WHITE	H	H	H	H	H	H	H	H	H	H	H	H	H	H	H	H	H	H	H	H	H	H	H	H
RED	BLACK	L	L	L	L	L	L	L	L	L	L	L	L	L	L	L	L	L	L	L	L	L	L	L	L
	RED(1)	L	L	L	L	L	L	L	H	L	L	L	L	L	L	L	L	L	L	L	L	L	L	L	L
	RED(2)	L	L	L	L	L	L	H	L	L	L	L	L	L	L	L	L	L	L	L	L	L	L	L	L
	:					:								:								:			
	RED(253)	H	H	H	H	H	H	L	H	L	L	L	L	L	L	L	L	L	L	L	L	L	L	L	L
	RED(254)	H	H	H	H	H	H	H	L	L	L	L	L	L	L	L	L	L	L	L	L	L	L	L	L
	RED(255)	H	H	H	H	H	H	H	H	L	L	L	L	L	L	L	L	L	L	L	L	L	L	L	L
GREEN	BLACK	L	L	L	L	L	L	L	L	L	L	L	L	L	L	L	L	L	L	L	L	L	L	L	L
	GREEN(1)	L	L	L	L	L	L	L	L	L	L	L	L	L	L	L	H	L	L	L	L	L	L	L	L
	GREEN(2)	L	L	L	L	L	L	L	L	L	L	L	L	L	L	H	L	L	L	L	L	L	L	L	L
	:					:								:								:			
	GREEN(253)	L	L	L	L	L	L	L	L	H	H	H	H	H	H	L	H	L	L	L	L	L	L	L	L
	GREEN(254)	L	L	L	L	L	L	L	L	H	H	H	H	H	H	H	L	L	L	L	L	L	L	L	L
	GREEN(255)	L	L	L	L	L	L	L	L	H	H	H	H	H	H	H	H	L	L	L	L	L	L	L	L
BLUE	BLACK	L	L	L	L	L	L	L	L	L	L	L	L	L	L	L	L	L	L	L	L	L	L	L	L
	BLUE(1)	L	L	L	L	L	L	L	L	L	L	L	L	L	L	L	L	L	L	L	L	L	L	L	H
	BLUE(2)	L	L	L	L	L	L	L	L	L	L	L	L	L	L	L	L	L	L	L	L	L	L	H	L
	:					:								:								:			
	BLUE(253)	L	L	L	L	L	L	L	L	L	L	L	L	L	L	L	L	H	H	H	H	H	H	L	H
	BLUE(254)	L	L	L	L	L	L	L	L	L	L	L	L	L	L	L	L	H	H	H	H	H	H	H	L
	BLUE(255)	L	L	L	L	L	L	L	L	L	L	L	L	L	L	L	L	H	H	H	H	H	H	H	H

[Note 1] Color(n): 'n' indicates gray scale step.

RELATIONSHIP BETWEEN INPUT DATA AND DISPLAY POSITION

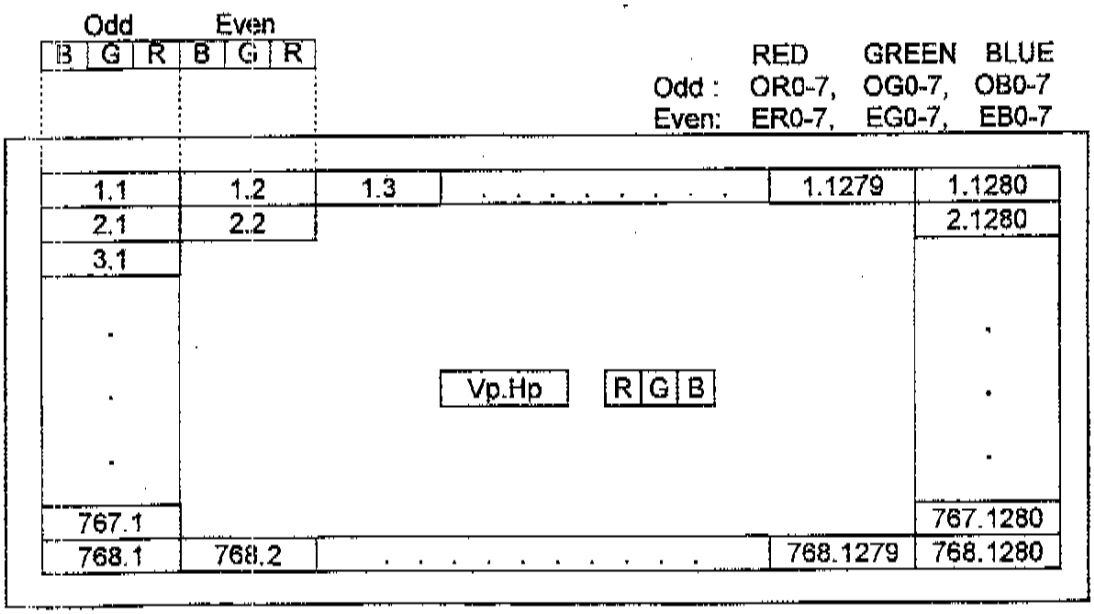

POWER ON/OFF SEQUENCE REQUIREMENT

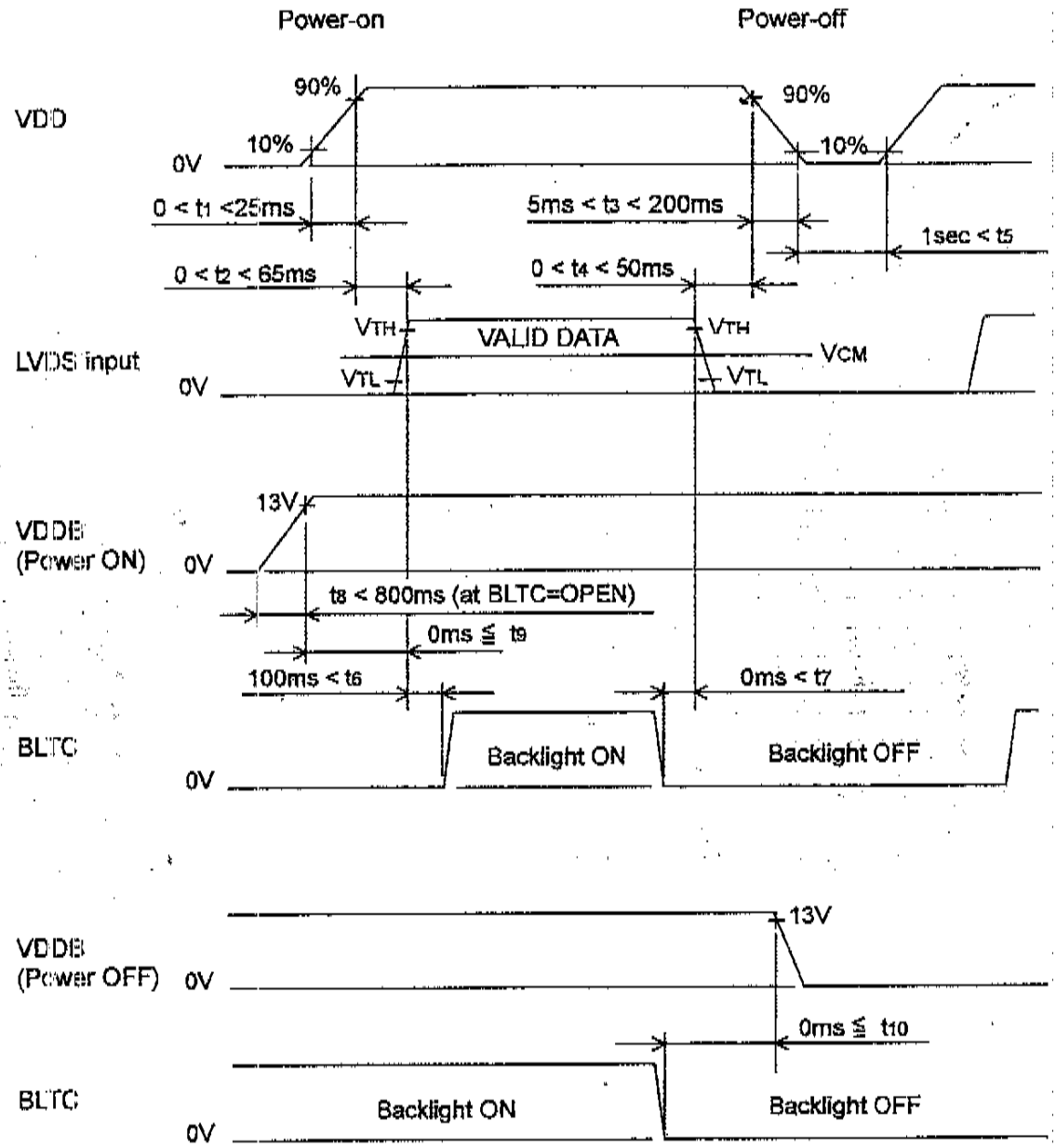

When the VDD is off, logic input must be kept at either low level or high impedance.

When the VDDB and BLTC are off, brightness control signal BRT2 should not be applied voltage.

Inverter (backlight) ON/OFF sequence is not related to logic sequence, however it is recommended to consider some timing difference between logic input as shown above.

If backlight lights on before LCD starts function, or if backlight is kept on after LCD stopped function, screen may look white for a moment or abnormal image may be displayed.

This is caused by variation in output signal from timing generator at logic input on or off. It does not cause damage to liquid crystal molecule and driving circuit.

PRECAUTIONS (INSTRUCTIONS FOR SAFE AND PROPER USE)

1. Instructions for safety

(1) Please do not disassemble or modify LCD module to avoid the possibility of electric shock, damage of electronic components, scratch at display surface and invasion of foreign particles. In addition, such activity may result in fire accident due to burning of electronic component.
LCD module disassembled or modified by customer is out of warranty.

(2) Please be careful in handling of LCD module with broken glass.
When the display glass breaks, please pay attention not to injure your fingers. The display surface has the plastic film attached, which prevents dispersion of glass pieces, however touching broken edge will injure your fingers. Also Lamp (Cold Cathode Fluorescent Lamp) is made of glass, therefore please pay attention in the same way.

(3) Please do not touch the fluid flown out of broken display glass.
If the fluid should stick to hand or clothes, wipe off with soap or alcohol immediately and then wash it with water. If the fluid should get in eyes, wash eyes immediately with pure water for more than 15 minutes and then consult the doctor.

(4) Lamp contains mercury inside. Please follow regulations or rules established by local autonomy at its disposal.

(5) Please be careful to electric shock.
Before handling LCD module, please switch off the power supply.
Since high voltage is applied to Lamp terminal, cable, connector and inverter circuit in operation mode, touching them will cause electric shock.

2. Instructions for designing

(1) Mounting of LCD
Please fix LCD module at all mounting flanges shown in this specification for installation onto system. The used screws should have proper dimensions.
Furthermore, designing of mounting parts should be adequate so that LCD module is not warped or twisted, to achieve good display quality.

(2) Heat radiation
Lamp generates heat at lighting and causes temperature rise inside system. Therefore, designing to radiate heat like radiation slits at cabinet is recommended to meet the specified operating temperature range for LCD module.

(3) Noise on power line
Spike noise contained in power line causes abnormal operation of driving circuit and abnormal display. To avoid it, spike noise should be suppressed below ±100mVp-p. (In any case, absolute maximum rating should be kept.)

(4) Power sequence
Before LCD module is switched on, please make sure that power supply and input signals of system, testing equipment, etc. meet the recommended power sequence.

(5) Absolute maximum rating
Absolute maximum rating specified in this specification has to be kept in any case. It shows the maximum that cannot be exceeded.
Exceeding it may cause burning or non-recoverable break of electronic components in circuit. Please make system design so that absolute maximum rating is not exceeded even if ambient temperature, input signal and components are varied.

(6) Protection for power supply
Please study to adapt protection for power supply against trouble of LCD modul , depending on usage condition of system. Fuse installed on LCD module should b never modified. Any modification to make the function of fuse ineffective ma cause burning or break of printed wiring board or other components at circu t trouble.

(7) Protection against electric shock
High voltage is applied to Lamp connector, inverter circuit and Lamp at lightin . Please make design not to expose or be accessible to such high voltage parts avoid electric shock.

(8) Protection cover and cut-off filter for ultraviolet rays
When LCD module is used under severe condition like outdoor, it is recommende to use transparent protection cover over display surface to avoid scratches ar invasion of dust and water. In addition, when LCD module is exposed to direct su light for long time, use of cut-off filter for ultraviolet rays is also recommende . Please be careful not to get condensation.

3. Instructions for use and handling

(1) Protection against Static electricity
C-MOS LSI and semiconductors are easily damaged by static discharge. LC module should be handled on conductive mat by person grounded with wrist stra etc. to avoid getting static electricity. Please be careful not to generate stat electricity during operation.

(2) Protection against dust and stain
LCD module should be handled in circumstance as clean as possible.
It is recommended to wear fingerstalls or ductless and soft gloves before handlir to avoid getting dust or stain on display surface.

(3) Protection film for display surface
It is recommended to remove protection film at nearly final process of assemblir to avoid getting scratch or dust. To remove film, please pick up its edge with du head tweezers or cellophane tape at first and then remove film gradually takir more than 3 seconds. If film is removed quickly, static electricity may be generate and may damage semiconductors or electronic components.

(4) Contamination of display surface
When display surface of LCD module is contaminated, please wipe the surfac softly with cotton swab or clean cloth. If it is not enough, please take it away wi cellophane tape or wipe the surface with cotton swab or clean cloth containir benzine. In this case, please be careful so that benzine does not get in inside LCD module, because it may be damaged.

(5) Water drop on LCD surface
Please do not leave LCD module with water drop. When the display surface ge water drop, please wipe it off with cotton swab or soft cloth immediately, otherwis display surface will be deteriorated.
If water gets in inside of LCD module, circuit may be damaged.

(6) Please make sure that LCD module is not warped or twisted at installation in system. Even temporary warp or twist may be the cause for failure.

(7) Mechanical stress
Please be careful not to apply strong mechanical stress like drop or shock to LC module. Such stress may cause break of display glass and Lamp or may be th cause for failure.

(8) Pressure to display surface
Please be careful not to apply strong pressure to display surface. Such pressu
may cause scratches at surface or may be the cause of failure.

(9) Protection against scratch
Please be careful not to hit, press or rub the display surface with hard material lil
tools. In addition, please do not put heavy or hard material on display surface, ar
do not stack LCD modules. Polarizer at front surface can be easily scratched.

(10) Plugging in of connector
Please be careful not to apply strong stress to connector part of LCD module
plugging in or out, because strong stress may damage the inside connection.
plugging in connector, place LCD module on the flat surface and hold the backsic
of connector on LCD module. Please make sure that connector is plugged
correctly. Insecure connection may be the cause for failure during operation.
In addition, please be careful not to put the connecting cable between cabinet
system and LCD module at installing LCD module into system.

(11) Handling of Lamp cable and FPC (Flexible Printed Circuit)
Please be careful not to pull or scratch Lamp cable, because Lamp or soldere
part of cable may be damaged consequently.
Also FPC should not be pulled or scratched.

(12) Switching off before plugging in connector
Please make sure that power is switched off before plugging in connector.
If power is on at plugging in or out, circuit of LCD module may be damaged.
When LCD is switched on for test or inspection, please make sure that pow
supply and input signals of driving system meet the specified power sequence.

(13) Temperature dependence of LCD display
Response speed (optical response) of LCD display is dependent on temperatur
Under low temperature, response speed is slower.
Also brightness and chromaticity change slightly depending on temperature.

(14) Slow light-up of Lamp under low temperature
Under low temperature, start-up of Lamp gets difficult. (The time from switch-on
stable lighting becomes longer.)
As characteristic of Lamp, operation under low temperature makes the life tin
shorter. To avoid this, it is recommended to operate under normal temperature.

(15) Condensation
LCD module may get condensation on its display surface and inside in th
circumstance where temperature changes much in short time.
Condensation can cause deterioration or failure. Therefore, please be careful n
to get condensation.

(16) Remaining of image
Displaying the same pattern for long time may cause remaining of image eve
after changing the pattern. This is not failure but will disappear with time.

4. Instructions for storage and transportation

(1) Storage
Please store LCD module in the dark place of room temperature and low humidity in original packing condition, to avoid condensation that may cause failure.
Since sudden temperature change may cause condensation, please store in circumstance of stable temperature.

(2) Stacking number
Since excessive weight causes deformation and damage of carton box, please stack only up to the number stated on carton box for storage and transportation.

(3) Handling
Since LCD module consists of glass and precise electronic components, it will be damaged by excessive shock and drop. Therefore, please handle the carton box carefully to minimize shock at loading, reloading and transportation.

NOTICES

1. The contents stated in this document and the product may be subject to chang without prior notice.
   When you kindly study to use this product, please ask our distributor or us fo the latest information.
2. This product is developed and produced for usage onto normal electroni products (office automation equipments, communication peripherals, electri appliance products, game machines, etc.) and is not suitable for application which need extremely high reliability and extreme safety (aero- or space-us machines, control equipments for nuclear power, life keeping equipments, etc.)
3. This document shall not grant or guarantee any right to adapt intellectua property or any other patents of third party.
4. Please use this product correctly according to operating conditions an precautions for use stated in this document.
   Please install safety proof in your designing to avoid human accident, fir accident and social damage, which may be resulted from malfunction of thi product.
5. This product is not designed to withstand against radiant rays.
6. It is strictly prohibited to copy or publish a part or whole of this documen without our prior written approval.

REVISION HISTORY

DATE	REVISION NO.	PAGE	DESCRIPTIONS
Nov. 28, 01	Ver. 1	-	Initial Release
Jan. 30, 02	Ver. 2	2	MCHANICAL CHARACTERISTICS Thickness and Weight
		3	ELECTRICAL CHARACTERISTICS (Logic) Power supply current IDD
			ELECTRICAL CHARACTERISTICS (Inverter) Power supply current IDDB and Operating frequency fL
		19	OUTER DIMENSIONS Location and profile of mounting studs, and Thickness

MECHANICAL CHARACTERISTICS

Ta=25 C

ITEM	SPECIFICATION	UNIT
Module size	920.0(W) x 580.0(H) x 50.5 Max.(t)	mm
Resolution	1280 x RGB(W) x 768(H)	pixel
Sub pixel pitch	0.2245(W) x 0.6735(H)	mm
Pixel pitch	0. 6735 (W) x 0. 6735 (H)	mm
Active viewing area	862.080(W) x 517.248(H)	mm
Bezel opening area	866.7(W) x 524.4(H)	mm
Weight	(14800) Typ.	g

ELECTRICAL ABSOLUTE MAXIMUM RATINGS

Ta=25 C

ITEM	SYMBOL	MIN	MAX	UNIT	NOTE
Power supply voltage	V_{DD}-V_{SS}	-0.3	6.0	V	Logic
	V_{DDB}-V_{SS}	0.0	17.0	V	Inverter
Input voltage	V_I	V_{SS}-0.3	V_{DD}+0.5	V	Logic
	V_{IB}	V_{SS}-0.3	7.0	V	Inverter

ENVIRONMENTAL ABSOLUTE MAXIMUM RATINGS

ITEM	SYMBOL	CONDITIONS	MIN	MAX	UNIT	NOTE
Ambient temperature	T_{ST}	Storage	-20	60	°C	Note 1
	T_{OP}	Operation	0	50		
Humidity	-	Ta=40°C max.	-	85	%RH	No condensation Note 2

[Note 1] Care should be taken so that the LCD module may not be subjected to the temperature beyond this specification.

[Note 2] Ta>40°C: Absolute humidity shall be less than that of 85%RH/40°C.

ELECTRICAL CHARACTERISTICS (Logic)

fV=60Hz, Ta=25°C

ITEM	SYMBOL	CONDITIONS	MIN	TYP	MAX	UNIT	NOTE
Power supply voltage	VDD-VSS		4.5	5.0	5.5	V	
Power supply current	IDD	Note 1	-	(850)	(1400)	mA	VDD =5.0
LVDS input logic voltage	VTH	High level	-	-	+100	mV	VCM=1.2
	VTL	Low level	-100	-	-		
LVDS input common mode voltage	VCM		1.0	1.2	1.4	V	VDD =5.0
LVDS input termination resistor	RT		-	100	-	Ω	Internal

[Note 1] Display pattern of typical power supply current is 256 gray scale bar.

ELECTRICAL CHARACTERISTICS (Inverter)

This module has two inverters. The characteristics of single inverter as shown below.

Ta=25°C

ITEM	SYMBOL	CONDITIONS	MIN	TYP	MAX	UNIT	NOTE
Power supply voltage	VDDB-VSS		13.0	14.0	15.0	V	
Power supply current	IDDB	Max. Brightness	(4300)	(5300)	(6300)	mA	VDDB =14.0V
		Min. Brightness	(800)	(1800)	(2800)		
Operating frequency	fL	Max. Brightness	(54)	(60)	(66)	kHz	
Backlight ON/OFF control (BLTC) voltage	VTHBLTC	Backlight ON	(2.0)	-	(5.0)	V	
	VTLBLTC	Backlight OFF	(0.0)	-	(0.8)		
Backlight ON/OFF control (BLTC) current	IBLTC		(-1.0)	-	(1.5)	mA	
Backlight brightness control (BRT2) Voltage	VTHBRT2	Max. Brightness	-	(1.0)	-	V	
	VTLBRT2	Min. Brightness	-	(0.0)	-		
Backlight brightness control (BRT2) current	IBRT2		(-1.0)	-	(1.5)	mA	

[Note 1] The measurement is a result after 15 minutes of lighting

[Note 2] The current capacity of power source should be 20A or higher. When power source capacity is lower than the 20A, the protector circuit in inverter may not operate in case of a trouble.

[Note 3] The inverter generates heat at Backlight ON and causes temperature rise. Therefore, take necessary a heat radiating design to meet the specified operating temperature range for LCD module inside your system.

[Note 4] Details of the functions of Backlight ON/OFF control (BLTC) and Backlight brightness control (BRT1 and BRT2) are mentioned in the terms of ***BACKLIGHT ON/OFF CONTROL FUNCTIONS (Inverter)*** and ***BRIGHTNESS CONTROL FUNCTIONS (Inverter)***.

[Note 5] Backlight driving conditions (lamp operating frequency fL especially) may interfere with horizontal frequency fH, causing the beat or flicker on the display. Therefore the horizontal frequency fH shall be adjusted in relation to lamp operating frequency fL to avoid interference.

ELECTRICAL CHARACTERISTICS (Lamp)

This module has the direct type backlight with 32 cold cathode fluorescent Lamps (CCFL). The characteristics of single Lamp as shown below.

Ta=25°C

ITEM	SYMBOL	CONDITIONS	MIN	TYP	MAX	UNIT	NOTE
Lamp Life	tOL	TBD	TBD	-	-	hrs	

OPTICAL CHARACTERISTICS

VDD=5.0V, fV=60Hz, Ta=25°C

ITEM		SYMBOL	CONDITIONS		MIN	TYP	MAX	UNIT	NOTE
Brightness		B	ϕ = 0°		-	(500)	-	cd/m²	Note 5,7
Brightness uniformity		δ_B	ϕ = 0°		-	-	(1.45)	-	Note 5,7
Contrast ratio		CR	ϕ = 0°		-	(600)	-	-	Note 2,4,7
Viewing angle range		ϕ	CR>10	θ = 0°	-	(85)	-	deg.	Note 1,2,4,7
				θ = 90°	-	(85)	-		
				θ =180°	-	(85)	-		
				θ =270°	-	(85)	-		
Response time	Rise	tr	ϕ =0°		-	(14)	-	ms.	Note 3,4,7
	Fall	tf			-	(8)	-		
Color of CIE Coordinate	Red	x	ϕ =0°		-	TBD	-	-	Note 4,7
		y			-	TBD	-		
	Green	x			-	TBD	-		
		y			-	TBD	-		
	Blue	x			-	TBD	-		
		y			-	TBD	-		
	White	x			-	(0.313)	-		
		y			-	(0.329)	-		
Color gamut		C	ϕ=0°, to NTSC		-	(72)	-	%	Note 4,7

[Note 1] Definition of "ϕ" and "θ"

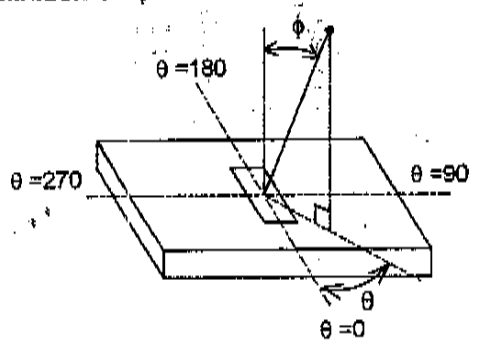

[Note 2] Definition of contrast ratio "CR"

$$CR = \frac{\text{Brightness at White}}{\text{Brightness at Black}}$$

[Note 3] Definition of response time "tr" and "tf"

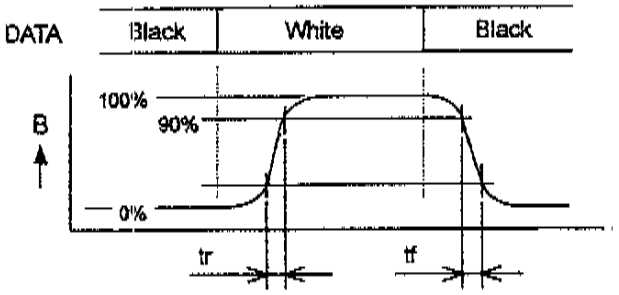

[Note 4] This shall be measured at center (point No.3 shown in Note 6).

[Note 5] The brightness shall be the average of five points shown in Note 6.

[Note 6] Measurement points

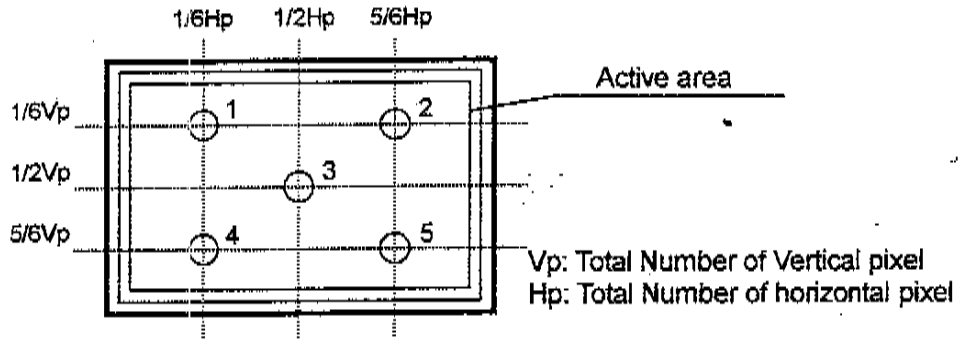

[Note 7] Measurement condition

(1) Measurement equipment: BM-5A (TOPCON Corp.), Field=2°
(2) Ambient temperature Ta: 25±2°C
(3) LCD: All pixels are WHITE, VIN=5.0V, fV=60Hz
(4) Measure after 30 minutes of Lamp warm up.
(5) Inverter input: TBD

BLOCK DIAGRAM

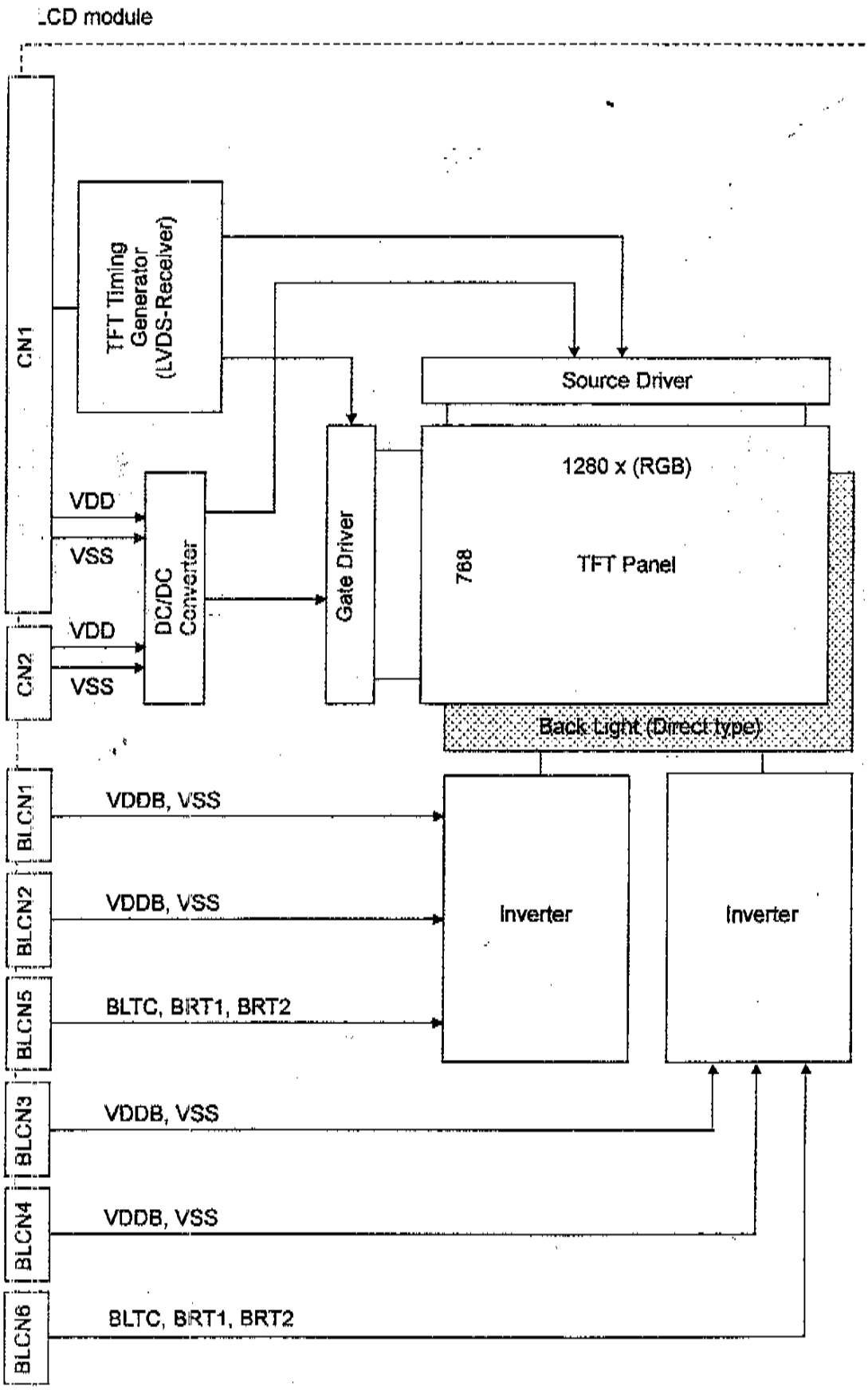

INTERFACE PIN CONNECTIONS (Logic)

LCM : CN1

PIN NO.	SYMBOL	FUNCTION
1	RXO0-	Negative Transmission Data of Pixel 0 (ODD data)
2	RXO0+	Positive Transmission Data of Pixel 0 (ODD data)
3	RXO1-	Negative Transmission Data of Pixel 1 (ODD data)
4	RXO1+	Positive Transmission Data of Pixel 1 (ODD data)
5	RXO2-	Negative Transmission Data of Pixel 2 (ODD data)
6	RXO2+	Positive Transmission Data of Pixel 2 (ODD data)
7	VSS	Power Ground
8	RXOC-	Negative Sampling Clock (ODD data)
9	RXOC+	Positive Sampling Clock (ODD data)
10	RXO3-	Negative Transmission Data of Pixel 3 (ODD data)
11	RXO3+	Positive Transmission Data of Pixel 3 (ODD data)
12	RXE0-	Negative Transmission Data of Pixel 0 (EVEN data)
13	RXE0+	Positive Transmission Data of Pixel 0 (EVEN data)
14	VSS	Power Ground
15	RXE1-	Negative Transmission Data of Pixel 1 (EVEN data)
16	RXE1+	Positive Transmission Data of Pixel 1 (EVEN data)
17	VSS	Power Ground
18	RXE2-	Negative Transmission Data of Pixel 2 (EVEN data)
19	RXE2+	Positive Transmission Data of Pixel 2 (EVEN data)
20	RXEC-	Negative Sampling Clock (EVEN data)
21	RXEC+	Positive Sampling Clock (EVEN data)
22	RXE3-	Negative Transmission Data of Pixel 3 (EVEN data)
23	RXE3+	Positive Transmission Data of Pixel 3 (EVEN data)
24	VSS	Power Ground
25	NC	No Connection
26	DE	DE Output
27	NC	No Connection
28	VDD	Logic Power Supply (5.0V normal)
29	VDD	Logic Power Supply (5.0V normal)
30	VDD	Logic Power Supply (5.0V normal)

CN1: FI-X30S-HF (JAE)

Suitable mating connector: FI-X30M/ FI-X30H/FI-X30C (JAE)

[Note 1] Internal termination resistors of LVDS input lines are 100Ω.

LCM : CN2

PIN NO.	SYMBOL	FUNCTION
1	VDD	Logic Power Supply (5.0V normal)
2	VDD	Logic Power Supply (5.0V normal)
3	VDD	Logic Power Supply (5.0V normal)
4	VDD	Logic Power Supply (5.0V normal)
5	VDD	Logic Power Supply (5.0V normal)
6	VDD	Logic Power Supply (5.0V normal)
7	VSS	Power Ground
8	VSS	Power Ground
9	VSS	Power Ground
10	VSS	Power Ground
11	VSS	Power Ground
12	VSS	Power Ground

CN2: 53261-1290 (MOLEX)

Suitable mating connector: 51021-1200 (MOLEX)

[Note 1] If the current capacity of the cable connected with VDD input pin of connectc CN1 isn't enough, Connector CN2 should be used.

INTERFACE PIN CONNECTIONS (Inverter)

Inverter: BLCN1, BLCN2, BLCN3, BLCN4

PIN NO.	SYMBOL	FUNCTION
1	VSS	Power Ground
2	VSS	Power Ground
3	VSS	Power Ground
4	VSS	Power Ground
5	VSS	Power Ground
6	VDDB	Backlight Power Supply (14.0V normal)
7	VDDB	Backlight Power Supply (14.0V normal)
8	VDDB	Backlight Power Supply (14.0V normal)
9	VDDB	Backlight Power Supply (14.0V normal)
10	VDDB	Backlight Power Supply (14.0V normal)

BLCN1, BLCN2, BLCN3, BLCN4: DF3-10P-2H (HIROSE)
Suitable mating connector: DF3-10S2R26 (HIROSE)

Inverter: BLCN5, BLCN6

PIN NO.	SYMBOL	FUNCTION
1	VSS	Power Ground
2	VSS	Power Ground
3	NC	No Connection
4	BLTC	Backlight ON/OFF Control
5	BRT1	Brightness Control 1
6	BRT2	Brightness Control 2
7	NC	No Connection
8	VSS	Power Ground
9	NC	No Connection

BLCN5, BLCN6: IL-Z-9PL-SMTY (JAE)
Suitable mating connector: IL-Z-9S-S125C3 (JAE)

BACKLIGHT ON/OFF CONTROL FUNCTIONS (Inverter)

ITEM	INPUT	FUNCTION
BLTC	High level or OPEN	Backlight ON
	Low level	Backlight OFF

[Note 1] The function of BLTC is valid when Backlight power is ON.

BRIGHTNESS CONTROL FUNCTIONS (Inverter)

ITEM	INPUT	FUNCTION
BRT1 BRT2	Volume Control: The Variable Resistor of 10KΩ type should be connected between BRT1 and BRT2.	0Ω: Minimum Brightness 10KΩ: Maximum Brightness
	Voltage Control: BRT1: VSS BRT2: Variable Voltage	0V: Minimum Brightness 1V: Maximum Brightness

[Note 1] The function of BRT1 and BRT2 are valid when Backlight power is ON.

INTERFACE (LVDS) ODD DATA ASSIGNMENT

ORin0 +/-	Rxout 7 OG0 (LSB)	Rxout 6 OR5	Rxout 4 OR4	Rxout 3 OR3	Rxout 2 OR2	Rxout 1 OR1	Rxout 0 OR0 (LSB)
ORin1 +/-	Rxout 18 OB1	Rxout 15 OB0 (LSB)	Rxout 14 OG5	Rxout 13 OG4	Rxout 12 OG3	Rxout 9 OG2	Rxout 8 OG1
ORin2 +/-	Rxout 26 DE	Rxout 25 VSYNC	Rxout 24 HSYNC	Rxout 22 OB5	Rxout 21 OB4	Rxout 20 OB3	Rxout 19 OB2
ORin3 +/-	Rxout 23 RESERVED	Rxout 17 OB7 (MSB)	Rxout 16 OB6	Rxout 11 OG7 (MSB)	Rxout 10 OG6	Rxout 5 OR7 (MSB)	Rxout 27 OR6
ORCLK +/-							

INTERFACE ODD SIGNALS

SYMBOL	FUNCTION
ODCLK	Odd Data Clock
HSYNC	Horizontal Sync - This signal initiates a new line (negative).
VSYNC	Vertical Sync - This signal initiates a new frame (negative).
DE	Data Enable (positive)
OR0	Odd Red Data (LSB)
OR1	Odd Red Data
OR2	Odd Red Data
OR3	Odd Red Data
OR4	Odd Red Data
OR5	Odd Red Data
OR6	Odd Red Data
OR7	Odd Red Data (MSB)
OG0	Odd Green Data (LSB)
OG1	Odd Green Data
OG2	Odd Green Data
OG3	Odd Green Data
OG4	Odd Green Data
OG5	Odd Green Data
OG6	Odd Green Data
OG7	Odd Green Data (MSB)
OB0	Odd Blue Data (LSB)
OB1	Odd Blue Data
OB2	Odd Blue Data
OB3	Odd Blue Data
OB4	Odd Blue Data
OB5	Odd Blue Data
OB6	Odd Blue Data
OB7	Odd Blue Data (MSB)

[Note 1] The valid synchronous signals are ODCLK and DE, HSYNC and VSYNC are invalid.

[Note 2] INTERFACE SIGNALS are loaded from LVDS-transmitter to TFT Timing generator with LVDS sequence. (See ***BLOCK DIAGRAM.***)

INTERFACE (LVDS) EVEN DATA ASSIGNMENT

ERin0 +/-	Rxout 7 EG0 (LSB)	Rxout 6 ER5	Rxout 4 ER4	Rxout 3 ER3	Rxout 2 ER2	Rxout 1 ER1	Rxout 0 ER0 (LSB)
ERin1 +/-	Rxout 18 EB1	Rxout 15 EB0 (LSB)	Rxout 14 EG5	Rxout 13 EG4	Rxout 12 EG3	Rxout 9 EG2	Rxout 8 EG1
ERin2 +/-	Rxout 26 DE	Rxout 25 VSYNC	Rxout 24 HSYNC	Rxout 22 EB5	Rxout 21 EB4	Rxout 20 EB3	Rxout 19 EB2
ERin3 +/-	Rxout 23 RESERVED	Rxout 17 EB7 (MSB)	Rxout 16 EB6	Rxout 11 EG7 (MSB)	Rxout 10 EG6	Rxout 5 ER7 (MSB)	Rxout 27 ER6
ERCLK +/-							

INTERFACE EVEN SIGNALS

SYMBOL	FUNCTION
EDCLK	Even Data Clock
ER0	Even Red Data (LSB)
ER1	Even Red Data
ER2	Even Red Data
ER3	Even Red Data
ER4	Even Red Data
ER5	Even Red Data
ER6	Even Red Data
ER7	Even Red Data (MSB)
EG0	Even Green Data (LSB)
EG1	Even Green Data
EG2	Even Green Data
EG3	Even Green Data
EG4	Even Green Data
EG5	Even Green Data
EG6	Even Green Data
EG7	Even Green Data (MSB)
EB0	Even Blue Data (LSB)
EB1	Even Blue Data
EB2	Even Blue Data
EB3	Even Blue Data
EB4	Even Blue Data
EB5	Even Blue Data
EB6	Even Blue Data
EB7	Even Blue Data (MSB)

[Note 1] INTERFACE SIGNALS are loaded from LVDS-transmitter to TFT Timing generator with LVDS sequence. (See ***BLOCK DIAGRAM.***)

INTERFACE (LVDS) SIGNAL TIMING PARAMETERS

PARAMETER	SYMBOL	MIN	TYP	MAX	UNIT	NOTE
Data Setup Time	tsu	900	-	-	ps	at Tin=25ns
Data Hold Time	thd	900	-	-	ps	Note 1

[Note 1] In the following timing waveform, the n-th edge of internal imaginary clock tcn, which is sampling position of LVDS input data signal, is given by:

$$tcn = (2n-1)\ Tin / 14 \qquad (n=1,2,\sim 7)$$

where Tin is period of LVDS input clock.
For this imaginary clock edge, data setup time is tsu and data hold time is thd respectively.

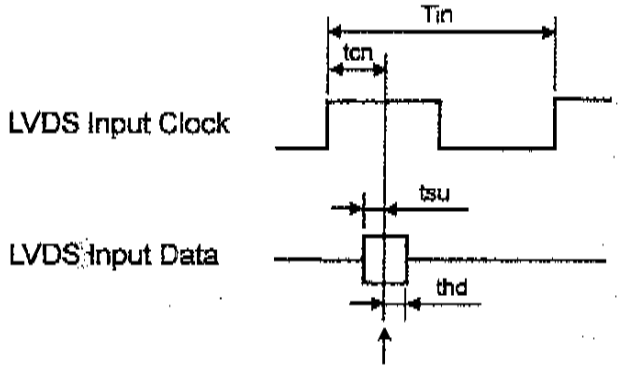

n-th edge of internal imaginary clock (data sampling position)

CYCLE JITTER of LVDS CLOCK

PARAMETER	SYMBOL	MIN	TYP	MAX	UNIT	NOTE
P-P of jitter / 100 cycles	tcj1	-	-	300	ps	Note 1
Jitter rate	tcj2	-	-	20	ps/cycle	

[Note 1] Please confirm tcj2 (Jitter rate), only if tcj1 (P-P of jitter/100cycles) exceeds 300ps.

[Additional explanation]

Right diagram shows the example of CYCLE JITTER of LVDS CLOCK.

According to this diagram, tCLK MIN. is 25.00ns and tCLK MAX. is 25.42ns between 0nc and 100nc. The tcj1 (P-P of jitter / 100 cycles) in this sphere is

tcj1=25.42-25.00=0.42 ns

and out of specification (300ps MAX.).
So, it is neccesary to measure tcj2 (jitter rate) and to judge whether it conform to above specification.

According to the diagram, the sharpest fluctuation of tCLK is 0.4ns per 5nc. So that, the tcj2 in this sphere is

tcj2=0.4/5=0.08 ns/cycle

and larger than specification (20ps/cycle MAX.).

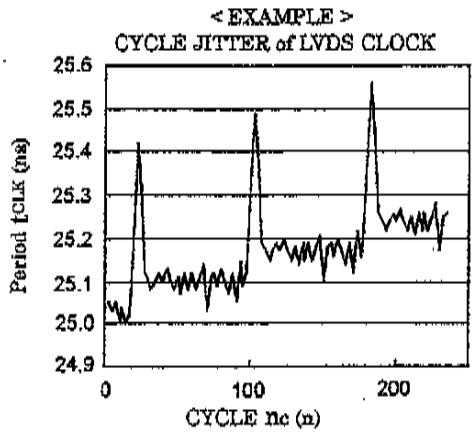

In conclusion, normal function of the LCD module can not be assured in this case.

INTERFACE SIGNAL TIMING PARAMETERS (DE_MODE)

PARAMETER		SYMBOL	MIN	TYP	MAX	UNIT	NOTE
CDCLK EDCLK	Frequency	f_{CLK}	(30)	40.2	(45)	MHz	
	Duty	D	(0.40)	(0.50)	(0.60)	-	$D=t_{CLKL}/t_{CLK}$
DE	Setup Time	t_{SI}	(3)	-	-	ns	for DCLK
	Hold Time	t_{HI}	(1.5)	-	-	ns	
	Horiz. Period	t_{HP}	690	832	1026	t_{CLK}	
	Horiz. DE	t_{HDE}	640	640	TBD	t_{CLK}	
	Vert. Period	t_{VP}	780	806	900	t_{HP}	fv=60Hz Typ.
	Vert. DE	n_{VDE}	768	768	TBD	n	
DATA	Setup Time	t_{SD}	(3)	-	-	ns	for DCLK
	Hold Time	t_{HD}	(1.5)	-	-	ns	

[Note 1] The relations between Horizontal period (tHP) and Horizontal DE (tHDE) must be kept $t_{HP} \geq t_{HDE}+50$ [tCLK].

[Note 2] f_H (Horizontal Frequency) = $1/t_{HP}$
fv (Vertical Frequency) = $1/t_{VP}$

[Note 3] These signal timing parameters are specified at the digital inputs of LVDS transmitter.

INTERFACE SIGNAL TIMING DIAGRAM (DE_MODE)

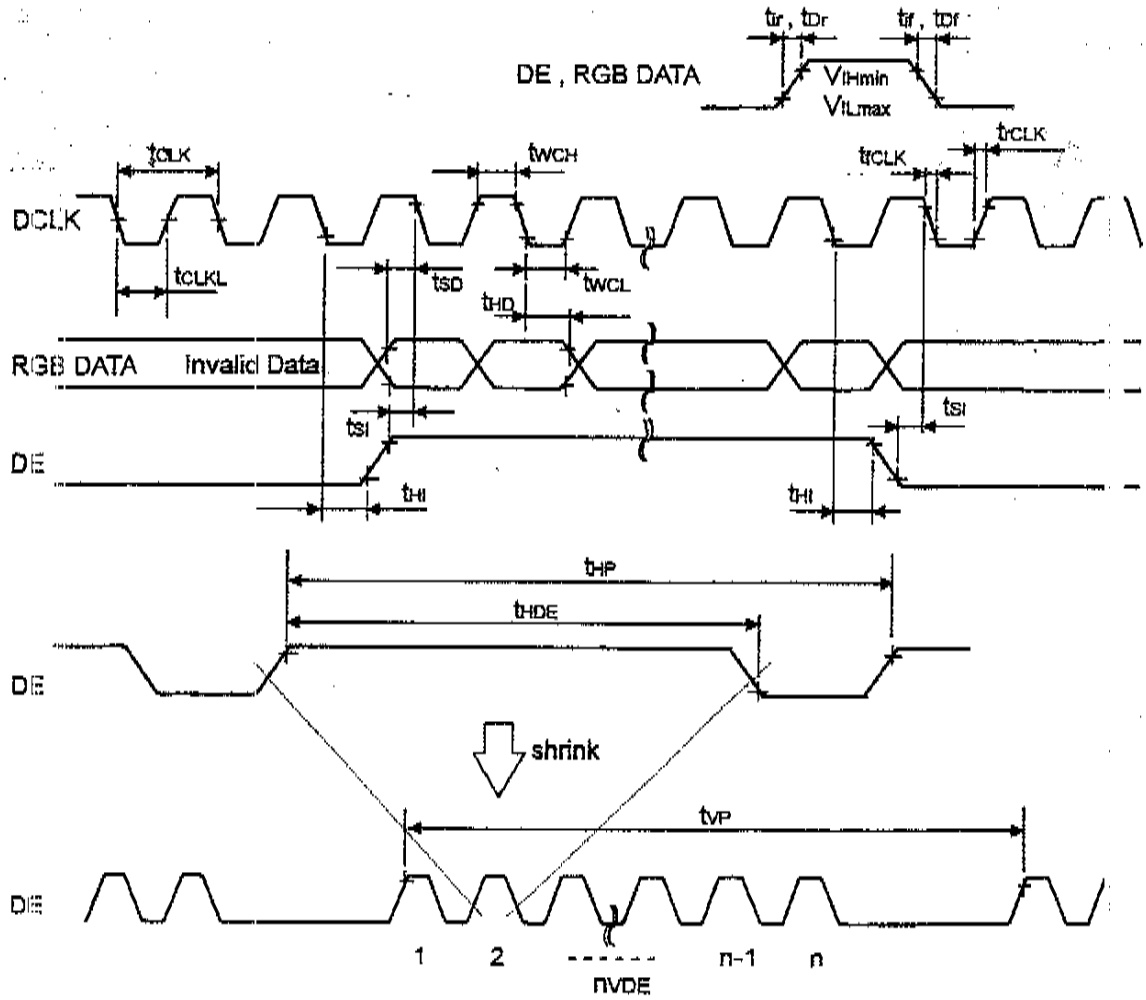

RELATIONSHIP BETWEEN INPUT DATA AND DISPLAY COLOR

DISPLAY COLOR \ INPUT DATA		RED DATA MSB							LSB	GREEN DATA MSB							LSB	BLUE DATA MSB							L
		OR7	OR6	OR5	OR4	OR3	OR2	OR1	OR0	OG7	OG6	OG5	OG4	OG3	OG2	OG1	OG0	OB7	OB6	OB5	OB4	OB3	OB2	OB1	0
		ER7	ER6	ER5	ER4	ER3	ER2	ER1	ER0	EG7	EG6	EG5	EG4	EG3	EG2	EG1	EG0	EB7	EB6	EB5	EB4	EB3	EB2	EB1	0
BASIC COLOR	BLACK	L	L	L	L	L	L	L	L	L	L	L	L	L	L	L	L	L	L	L	L	L	L	L	
	RED(255)	H	H	H	H	H	H	H	H	L	L	L	L	L	L	L	L	L	L	L	L	L	L	L	
	GREEN(255)	L	L	L	L	L	L	L	L	H	H	H	H	H	H	H	H	L	L	L	L	L	L	L	
	BLUE(255)	L	L	L	L	L	L	L	L	L	L	L	L	L	L	L	L	H	H	H	H	H	H	H	
	CYAN	L	L	L	L	L	L	L	L	H	H	H	H	H	H	H	H	H	H	H	H	H	H	H	
	MAGENTA	H	H	H	H	H	H	H	H	L	L	L	L	L	L	L	L	H	H	H	H	H	H	H	
	YELLOW	H	H	H	H	H	H	H	H	H	H	H	H	H	H	H	H	L	L	L	L	L	L	L	
	WHITE	H	H	H	H	H	H	H	H	H	H	H	H	H	H	H	H	H	H	H	H	H	H	H	
RED	BLACK	L	L	L	L	L	L	L	L	L	L	L	L	L	L	L	L	L	L	L	L	L	L	L	
	RED(1)	L	L	L	L	L	L	L	H	L	L	L	L	L	L	L	L	L	L	L	L	L	L	L	
	RED(2)	L	L	L	L	L	L	H	L	L	L	L	L	L	L	L	L	L	L	L	L	L	L	L	
	:					:								:								:			
	RED(253)	H	H	H	H	H	H	L	H	L	L	L	L	L	L	L	L	L	L	L	L	L	L	L	
	RED(254)	H	H	H	H	H	H	H	L	L	L	L	L	L	L	L	L	L	L	L	L	L	L	L	
	RED(255)	H	H	H	H	H	H	H	H	L	L	L	L	L	L	L	L	L	L	L	L	L	L	L	
GREEN	BLACK	L	L	L	L	L	L	L	L	L	L	L	L	L	L	L	L	L	L	L	L	L	L	L	
	GREEN(1)	L	L	L	L	L	L	L	L	L	L	L	L	L	L	L	H	L	L	L	L	L	L	L	
	GREEN(2)	L	L	L	L	L	L	L	L	L	L	L	L	L	L	H	L	L	L	L	L	L	L	L	
	:					:								:								:			
	GREEN(253)	L	L	L	L	L	L	L	L	H	H	H	H	H	H	L	H	L	L	L	L	L	L	L	
	GREEN(254)	L	L	L	L	L	L	L	L	H	H	H	H	H	H	H	L	L	L	L	L	L	L	L	
	GREEN(255)	L	L	L	L	L	L	L	L	H	H	H	H	H	H	H	H	L	L	L	L	L	L	L	
BLUE	BLACK	L	L	L	L	L	L	L	L	L	L	L	L	L	L	L	L	L	L	L	L	L	L	L	
	BLUE(1)	L	L	L	L	L	L	L	L	L	L	L	L	L	L	L	L	L	L	L	L	L	L	L	
	BLUE(2)	L	L	L	L	L	L	L	L	L	L	L	L	L	L	L	L	L	L	L	L	L	L	H	
	:					:								:								:			
	BLUE(253)	L	L	L	L	L	L	L	L	L	L	L	L	L	L	L	L	H	H	H	H	H	H	L	
	BLUE(254)	L	L	L	L	L	L	L	L	L	L	L	L	L	L	L	L	H	H	H	H	H	H	H	
	BLUE(255)	L	L	L	L	L	L	L	L	L	L	L	L	L	L	L	L	H	H	H	H	H	H	H	

[Note 1] Color(n): 'n' indicates gray scale step.

RELATIONSHIP BETWEEN INPUT DATA AND DISPLAY POSITION

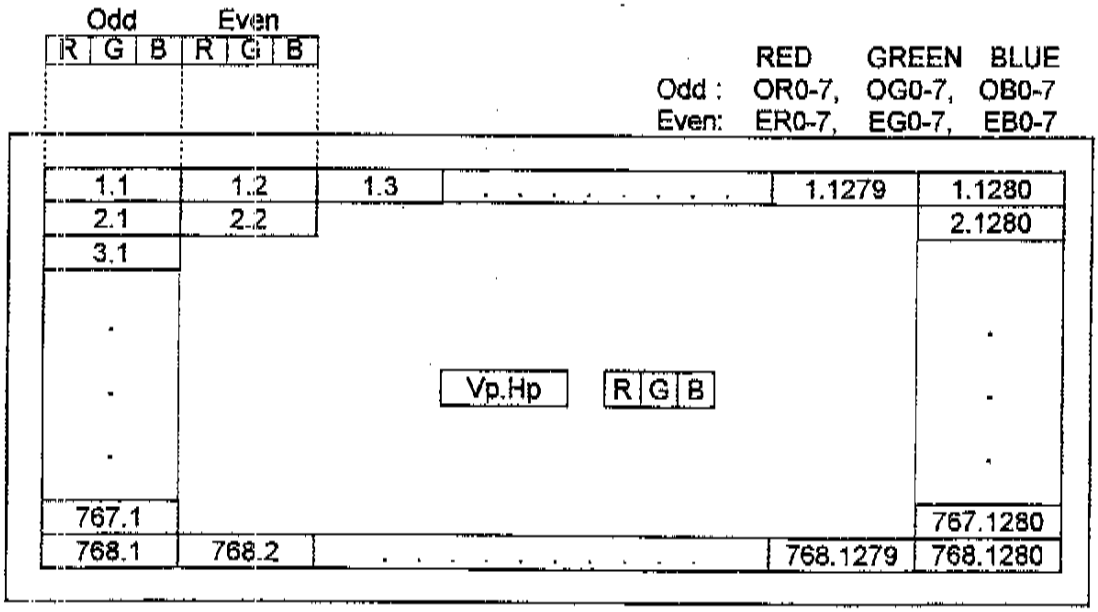

POWER ON/OFF SEQUENCE REQUIREMENT

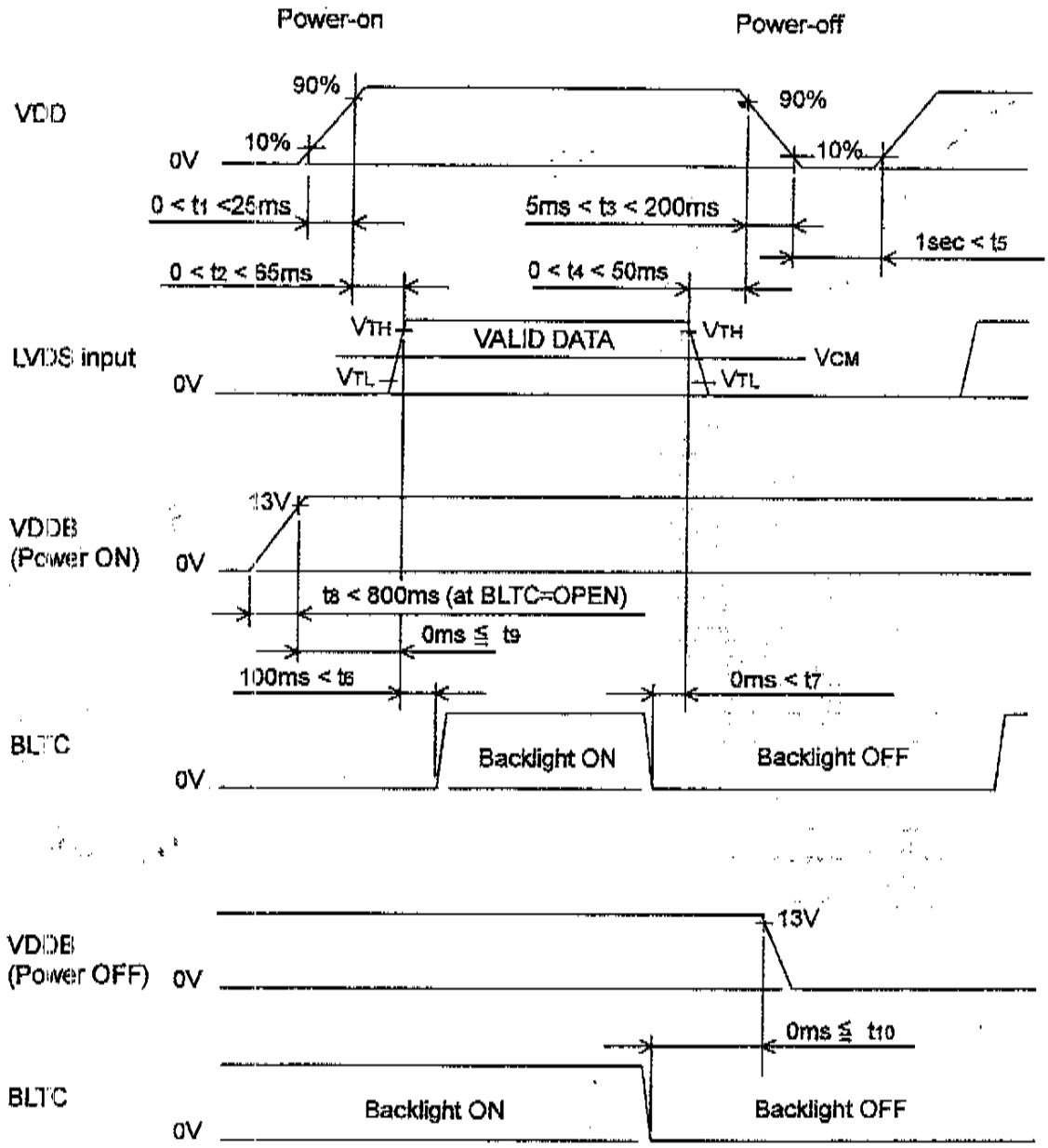

When the VDD is off, logic input must be kept at either low level or high impedance.

When the VDDB and BLTC are off, brightness control signal BRT2 should not be applied voltage.

Inverter (backlight) ON/OFF sequence is not related to logic sequence, however it is recommended to consider some timing difference between logic input as shown above.
If backlight lights on before LCD starts function, or if backlight is kept on after LCD stopped function, screen may look white for a moment or abnormal image may be displayed.
This is caused by variation in output signal from timing generator at logic input on or off. It does not cause damage to liquid crystal molecule and driving circuit.

PRECAUTIONS (INSTRUCTIONS FOR SAFE AND PROPER USE)

1. Instructions for safety

(1) Please do not disassemble or modify LCD module to avoid the possibility electric shock, damage of electronic components, scratch at display surface ar invasion of foreign particles. In addition, such activity may result in fire accide due to burning of electronic component.
LCD module disassembled or modified by customer is out of warranty.

(2) Please be careful in handling of LCD module with broken glass.
When the display glass breaks, please pay attention not to injure your fingers. Th display surface has the plastic film attached, which prevents dispersion of glas pieces, however touching broken edge will injure your fingers. Also Lamp (Col Cathode Fluorescent Lamp) is made of glass, therefore please pay attention in th same way.

(3) Please do not touch the fluid flown out of broken display glass.
If the fluid should stick to hand or clothes, wipe off with soap or alcohol immediatel and then wash it with water. If the fluid should get in eyes, wash eyes immediatel with pure water for more than 15 minutes and then consult the doctor.

(4) Lamp contains mercury inside. Please follow regulations or rules established b local autonomy at its disposal.

(5) Please be careful to electric shock.
Before handling LCD module, please switch off the power supply.
Since high voltage is applied to Lamp terminal, cable, connector and inverte circuit in operation mode, touching them will cause electric shock.

2. Instructions for designing

(1) Mounting of LCD
Please fix LCD module at all mounting flanges shown in this specification fo installation onto system. The used screws should have proper dimensions.
Furthermore, designing of mounting parts should be adequate so that LCD modul is not warped or twisted, to achieve good display quality.

(2) Heat radiation
Lamp generates heat at lighting and causes temperature rise inside system. Therefore, designing to radiate heat like radiation slits at cabinet is recommende to meet the specified operating temperature range for LCD module.

(3) Noise on power line
Spike noise contained in power line causes abnormal operation of driving circui and abnormal display. To avoid it, spike noise should be suppressed belov ±100mVp-p. (In any case, absolute maximum rating should be kept.)

(4) Power sequence
Before LCD module is switched on, please make sure that power supply and inpu signals of system, testing equipment, etc. meet the recommended powe sequence.

(5) Absolute maximum rating
Absolute maximum rating specified in this specification has to be kept in any case It shows the maximum that cannot be exceeded.
Exceeding it may cause burning or non-recoverable break of electronic components in circuit. Please make system design so that absolute maximum rating is not exceeded even if ambient temperature, input signal and components are varied.

(6) Protection for power supply
Please study to adapt protection for power supply against trouble of LCD modul depending on usage condition of system. Fuse installed on LCD module should b never modified. Any modification to make the function of fuse ineffective ma cause burning or break of printed wiring board or other components at circu trouble.

(7) Protection against electric shock
High voltage is applied to Lamp connector, inverter circuit and Lamp at lighting Please make design not to expose or be accessible to such high voltage parts t avoid electric shock.

(8) Protection cover and cut-off filter for ultraviolet rays
When LCD module is used under severe condition like outdoor, it is recommende to use transparent protection cover over display surface to avoid scratches an invasion of dust and water. In addition, when LCD module is exposed to direct su light for long time, use of cut-off filter for ultraviolet rays is also recommendec Please be careful not to get condensation.

3. Instructions for use and handling

(1) Protection against Static electricity
C-MOS LSI and semiconductors are easily damaged by static discharge. LCI module should be handled on conductive mat by person grounded with wrist stra etc. to avoid getting static electricity. Please be careful not to generate stati electricity during operation.

(2) Protection against dust and stain
LCD module should be handled in circumstance as clean as possible.
It is recommended to wear fingerstalls or ductless and soft gloves before handlin to avoid getting dust or stain on display surface.

(3) Protection film for display surface
It is recommended to remove protection film at nearly final process of assemblin to avoid getting scratch or dust. To remove film, please pick up its edge with dull head tweezers or cellophane tape at first and then remove film gradually takin more than 3 seconds. If film is removed quickly, static electricity may be generatec and may damage semiconductors or electronic components.

(4) Contamination of display surface
When display surface of LCD module is contaminated, please wipe the surfac softly with cotton swab or clean cloth. If it is not enough, please take it away wit cellophane tape or wipe the surface with cotton swab or clean cloth containin benzine. In this case, please be careful so that benzine does not get in inside o LCD module, because it may be damaged.

(5) Water drop on LCD surface
Please do not leave LCD module with water drop. When the display surface get water drop, please wipe it off with cotton swab or soft cloth immediately, otherwis display surface will be deteriorated.
If water gets in inside of LCD module, circuit may be damaged.

(6) Please make sure that LCD module is not warped or twisted at installation int system. Even temporary warp or twist may be the cause for failure.

(7) Mechanical stress
Please be careful not to apply strong mechanical stress like drop or shock to LCI module. Such stress may cause break of display glass and Lamp or may be the cause for failure.

(8) Pressure to display surface
Please be careful not to apply strong pressure to display surface. Such pressu may cause scratches at surface or may be the cause of failure.

(9) Protection against scratch
Please be careful not to hit, press or rub the display surface with hard material lil tools. In addition, please do not put heavy or hard material on display surface, ar do not stack LCD modules. Polarizer at front surface can be easily scratched.

(10) Plugging in of connector
Please be careful not to apply strong stress to connector part of LCD module plugging in or out, because strong stress may damage the inside connection. plugging in connector, place LCD module on the flat surface and hold the backsic of connector on LCD module. Please make sure that connector is plugged correctly. Insecure connection may be the cause for failure during operation.
In addition, please be careful not to put the connecting cable between cabinet system and LCD module at installing LCD module into system.

(11) Handling of Lamp cable and FPC (Flexible Printed Circuit)
Please be careful not to pull or scratch Lamp cable, because Lamp or soldere part of cable may be damaged consequently.
Also FPC should not be pulled or scratched.

(12) Switching off before plugging in connector
Please make sure that power is switched off before plugging in connector.
If power is on at plugging in or out, circuit of LCD module may be damaged.
When LCD is switched on for test or inspection, please make sure that powe supply and input signals of driving system meet the specified power sequence.

(13) Temperature dependence of LCD display
Response speed (optical response) of LCD display is dependent on temperature Under low temperature, response speed is slower.
Also brightness and chromaticity change slightly depending on temperature.

(14) Slow light-up of Lamp under low temperature
Under low temperature, start-up of Lamp gets difficult. (The time from switch-on t stable lighting becomes longer.)
As characteristic of Lamp, operation under low temperature makes the life tim shorter. To avoid this, it is recommended to operate under normal temperature.

(15) Condensation
LCD module may get condensation on its display surface and inside in th circumstance where temperature changes much in short time.
Condensation can cause deterioration or failure. Therefore, please be careful nc to get condensation.

(16) Remaining of image
Displaying the same pattern for long time may cause remaining of image eve after changing the pattern. This is not failure but will disappear with time.

4. Instructions for storage and transportation

(1) Storage
Please store LCD module in the dark place of room temperature and low humidi in original packing condition, to avoid condensation that may cause failure.
Since sudden temperature change may cause condensation, please store circumstance of stable temperature.

(2) Stacking number
Since excessive weight causes deformation and damage of carton box, pleas stack only up to the number stated on carton box for storage and transportation.

(3) Handling
Since LCD module consists of glass and precise electronic components, it will b damaged by excessive shock and drop. Therefore, please handle the carton bo carefully to minimize shock at loading, reloading and transportation.