Revision History

Date (Rev No.)	Sheet (New)	Item	Old	New	Reason
2007-05-31	6	Fuse	V_{DD} : (1.5)A V_{LED} : (2.0)A	V_{DD} : 1.0A V_{LED} : 1.25A	Corrected
	13	Surface Treatment	Anti-glare and hard coat 3H on LCD surface	Anti-Reflection and hard coat 2H on LCD surface	Corrected
		UL file number	TBD.	E215238	Added
	24	SMBus Command	TBD.	Step 1 : 0Ah Step 2 : 10h Step 3 : 15h Step 4 : 1Ah Step 5 : 30h Step 6 : 5Dh Step 7 : 93h Step 8 : E9h	Added
	25	Current Consumption (I_{LED})	TBD.	H: 260(typ.), 330(max.) L: 310(typ.), 380(max.)	Added
	26	Chromaticity	TBD.	x_R : 0.520(min), 0.640(max) y_R : 0.280(min), 0.400(max) x_G : 0.250(min), 0.370(max) y_G : 0.490(min), 0.610(max) x_B : 0.095(min), 0.215(max) y_B : 0.095(min), 0.215(max) x_W : 0.253(min), 0.373(max) y_W : 0.269(min), 0.389(max)	Added
	36	Luminance Uniformity	Position of Measurement Point		Corrected
	37 38 40	EDID	21: 1A 22: 10 26: AE 27: 99 31: 26 32: 22 100: A0 113:TBD 114:TBD 115:TBD 116:TBD 117:TBD 118:TBD 119:TBD 120:TBD	21: 1D 22: 12 26: F5 27: 94 31: 27 32: 20 100: A2 113: 0A 114: 10 115: 15 116: 1A 117: 30 118: 5D 119: 93 120: E9	Revised
2007-06-15	24	SMBus Command	Step 1 : 0Ah Step 2 : 10h Step 3 : 15h Step 4 : 1Ah Step 5 : 30h Step 6 : 5Dh Step 7 : 93h Step 8 : E9h	Step 1 : 08h Step 2 : 0Ch Step 3 : 10h Step 4 : 14h Step 5 : 28h Step 6 : 50h Step 7 : 7Fh Step 8 : D8h	Revised
	26	Luminance	SMBus:E9h	SMBus:D8h	Revised
	33	Packaging	-	Add Corrugated cover	Added
	37 40	EDID	10: E2 11: 58 100: A2 113: 0A 114: 10 115: 15 116: 1A 117: 30 118: 5D 119: 93 120: E9	10: 06 11: 23 100: A3 113: 08 114: 0C 115: 10 116: 14 117: 28 118: 50 119: 7F 120: D8	Revised
2007-06-19	30	Reliability Test	---	Delete S & V test	Corrected

Caution and Handling Precaution

For your end users' safety, it is strongly advised that the items with "＊" should be included in the instruction manual of the system which may be issued by your organization.

Toshiba Matsushita Display Technology always endeavor to maintain sufficient quality of the LCD module in process of designing and manufacturing, however, to avoid causing extended damages such as accidents resulting in injury or death, fire accidents, or social damages if the LCD module fails, please adopt safe design as a whole set, by adopting redundant design, taking measure in set design to prevent fire-spreading, over-current, or incorrect operation, etc.

For Safety

⚠ Warning

1) SPECIAL PURPOSES

a) Toshiba Matsushita Display Technology's Standard LCD modules have not been customized for operation in extreme environments or for use in applications where performance failures could be life-threatening or otherwise catastrophic.

b) Since they have not been designed for operation in extreme environments, they must never be used in devices that will be exposed to temperatures above 50 degrees Celsius or below 0 degrees Celsius, to X-ray or Gamma-ray radiation, or to abnormally high levels of vibration or shock which exceed Toshiba Matsushita Display Technology's specification limits.

c) In addition, since Toshiba Matsushita Display Technology's Standard LCD modules have not been designed for use in applications where performance failures could be life-threatening of catastrophic, they must never be installed in aircraft navigation control systems (such as, but not limited to Traffic Collision Avoidance System and Air Traffic Indicator), in military defense or weapons systems, in critical industrial process-control systems (e.g., those involved in the production of nuclear energy), or in critical medical device or patient life-support systems.

2) ELECTRIC SHOCK

DISCONNECT POWER SUPPLY before handling LCD modules. In order to prevent electric shock, DO NOT TOUCH the electrode part, cables, connectors, and the LED circuit part of a module in which LED are built in as a light source of a backlight or a front light. High voltage is supplied to these parts while power supply is turned on.

⚠ Caution

1. Caution for Safety

1)* DISASSEMBLING OR MODIFICATION

DO NOT DISASSEMBLE OR MODIFY the modules.

Sensitive parts inside LCD module may be damaged, and dusts or scratches may mar the displays. Toshiba Matsushita Display Technology does not warrant the modules, if customer disassembled or modified them.

2)* BREAKAGE OF LCD PANEL

DO NOT INGEST liquid crystal material, DO NOT INHALE this material, and DO NOT PERMIT this material to contact the skin, if glass of LCD panel is broken.

If liquid crystal material contacts the skin, mouth or clothing, take the following actions immediately.

In case contact to the eye or mouth, rinse with large amount of running water for more than 15 minutes. In case contact to the skin or clothing, wipe it off immediately and wash with soap and large amount of running water for more than 15 minutes. The skin or closing may be damaged if liquid crystal material is left adhered.

In case ingestion, rinse out the mouth well with water. After spewing up by drinking large amount of water, get medical treatment.

3)* GLASS OF LCD PANEL

BE CAREFUL WITH CHIPS OF GRASS that may cause injuring fingers or skin, when the glass is broken.

4) ABSOLUTE MAXIMUM RATINGS

DO NOT EXCEED the absolute maximum rating values under the worst probable conditions caused by the supply voltage variation, input voltage variation, variation in parts' constants, environmental temperature, etc., otherwise LCD module may be damaged.

5) RECOMMENDED OPERATING CONDITIONS

Don't exceed “the recommended operation conditions” in this specification. (The LCD module should be used within “the recommended operation conditions”.)

The performance and quality of the LCD module are warranted only when the LCD module is used within “the recommended operation conditions”. Toshiba Matsushita Display Technology never warrants the performance and quality of the LCD module when you use the LCD module over “the recommended operation conditions”, although within “the absolute maximum rating”.

To use the LCD module over “the recommended operation conditions” may have bad influence on the characteristics and reliability of the LCD module and may shorten the life of the LCD module.

Therefore, when designing the whole set, not to be over “the recommended operation conditions”, you should fully take care of supply voltage change, characteristic of connection parts, serge of input-and-output line, and surrounding temperature.

6) POWER PROTECTION CIRCUIT

Employ protection circuit for power supply, whenever the specification specifies it.

A suitable protection circuit should be applied, based on each system design.

DO NOT MODIFY the fuse used in the module. It may cause overheating and/or burning if dust or metal particles touch PCBs in the LCD module.

7) DISPOSAL

Always comply all applicable environmental regulations, when disposing of LCD module.

8) EDGES OF PARTS

Be careful with handling the metal frame (bezel) of a module. Even though burr disposal treatment is performed, it may cause injuring. Be careful with edges of glass parts and touch panel identically. For designing the system, give special consideration that the wiring and parts do not touch those edges.

9) LCD module's upper and lower end portions (LED portions) get hot.

The LEDs are built in the upper and lower end portions of LCD module as backlight sources. While LEDs are lit and immediately after turned off, the face of LCD module (display surface), top and bottom faces, metal portions of right and left side faces, and metal portion of LED unit cover(s) on the back are hot and require caution.

In case of touching (working on) such portion by necessity, surely disconnect the power to the LCD module beforehand (refer to page 2, item (2)), protect hands (skin) with low thermal conductive gloves etc. or wait until the temperature of metal portion gets as low as room temperature, and then touch (work on) the portion while being careful to prevent electrostatic breakdown (refer to page 5, item (2)).

For Designing the System

2-1 DESIGNING ENCLOSURE

1) MECHANICAL DIMENSIONS

Refer to the individual specification for LCD module's mechanical dimensions.

2) MOUNTING HOLES

This is a semi-finished product without front bezel. And this LCD module has no mounting holes.

Please contact to your representative or Toshiba Matsushita Display Technology Co., Ltd. before starting mechanical design.

3) Handling

When designing module structure or chassis, please conduct a full examination and evaluation internally to prevent troubles and glass breakage.

As for the glass breakage by cell pressing in the market, and the display unevenness (pooling, abnormal display (white spot), etc.) caused by front bezel or objects on front face and back face, Toshiba Matsushita Display Technology Co., Ltd. cannot deal such problems as our sole responsibility. If such case happens, let us consult with you separately.

4)* BENDING / TWISTING

Make sure to design the enclosure so that bending/twisting forces are not applied to LCD module during and after the installation into the system.

Design it so that the rear side of the LCD module may never be pushed by the set and so on. When the rear side of the LCD module is pushed, a panel is transformed, and that may cause ununiformity on the display.

5) DESIGN OF LCD MODULE REAR SURFACE

Design to not touch object to oblique lines area of drawing mentioned below.

This LCD module uses light guide. If light guide is pushed, there is danger of appearance of white spot or black spot.

And if circuit board is pushed, there is danger of damage.

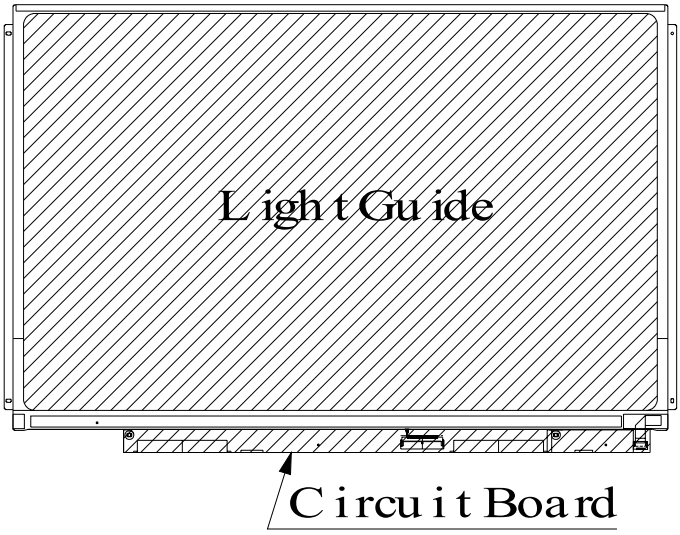

6) GASES FROM SETTING MATERIAL

Some plastic materials and shock absorbing materials (rubber) used in the system may generate gases that may cause the deterioration of the polarizer laminated on LCD's panel or internal parts of the module. Prior confirmation is required.

7) GASES FROM PACKAGING MATERIAL

Some materials used for packaging (for which sulfuric acid is used in the recycling process) generate gases that may cause the deterioration of the polarizer laminated on LCD's panel or internal parts of the module. Prior confirmation is required.

2-2 DESIGNING POWER SUPPLIES AND INPUT SIGNALS TO LCD MODULE

1) CAPACITY OF POWER SUPPLY

Be sure that power supply output from the system should be limited to smaller values than listed shown below. (For example Quick Arcing Fuse with listed ratings can be used.)

It is because this LCD module explained in this specification has a current limiter, with such function at power input line(s). But it may be some possibility of overheat and/or burning of LCD module and its peripheral devices before current limiter of the module when open-short test of the module is performed by using power supply higher than following recommended value.

Power supply	Recommended maximum output current of power supply	Recommended Fuse Rating (in case of using fuse for current limiter)	Built-in Fuse Rating (for reference)	
V_{DD}	4.0 A	0.5-3.0 A	1.0 A	←&
V_{LED}	4.0 A	0.5-3.0 A	1 .25 A	←&

Refer to individual specification for details for capacity of power supply, and apply some protection circuit including fuses for power supply lines.

2) SEQUENCE OF POWER SUPPLIES AND INPUT SIGNALS

Power-supply lines should be designed as follows.

Power supplies should always be turned on before the input signals are supplied to LCD module, and the input signals should be disconnected before power supplies are turned off.

If this sequence is not followed, it may cause mis-operation of the panel.

Refer to "2.4.2 Sequence of Power Supplies and Signals" for the detailed specification.

In addition, refer to individual specifications for unused terminals.

3) PREVENTION OF IMAGE STICKING

Design the system not to display same pattern for a long time in order to prevent image sticking on the panel. Note that incorrect sequence of power supplies and input signals may cause image sticking too.

4) GROUNDING OF METAL FRAME

Grounding of metal frame of LCD module is generally effective to prevent radiation interference from the system design. However, the necessity of grounding, or effective grounding method should be dependent on each system design.

2-3 DESIGNING FOR BETTER VISIBILITY

1) PANEL ANGLE

Visibility of LCD module deeply depends on the viewing directions. The position and the angle of LCD module in the system should be designed so that the best visibility can be obtained at the actual usage.

2) WINDOW OPENING

Dimensions of window opening of the system's enclosure should be designed as smaller than "Viewing Area" and larger than "Active Area" specified in individual specification in order to obtain better appearance.

3) PROTECTIVE COVER

In case of severe environmental condition like outdoor usage, a proper transparent protective cover(lens) over LCD module is recommended to prevent scratches, invasion of dust, water, etc., between the system housing and LCD module.

It is recommended to apply an Ultra-violet filter (less than 390nm cut) onto the LCD module, for outdoor operation.

Strong ultra-violet radiation may damage the panel. However, in that case, transmittance-luminance will decrease. Careful selection of material is required.

Don't expose any parts, except the viewing area, into the direct sunlight , otherwise deterioration may occur.

For Installation in Assembly

3-1 CARRYING

Hold metal frame (bezel) when you carry LCD module.

3-2 ESD (ELECTRO-STATIC DISCHARGE) PREVENTION

The C-MOS LSIs used in LCD module is very sensitive to ESD. The following caution should be taken when installing LCD module to an enclosure of the system in order to prevent damage of C-MOS LSIs used in LCD module.

1) HUMIDITY

Ambient humidity of working area is recommended to be higher than 50%RH in order to avoid ESD.

2) GROUNDING

2-1) Grounded electro-conductive mats are recommended to be covered on the floor of working area and surface of working benches.

2-2) The grounding should be done through a resister of 0.5-1M ohms in order to prevent spark of ESD.

2-3) Person handling LCD modules should be grounded with such as wrist band.

2-4) Tools like soldering iron and screw drivers and working benches should be grounded.

3) IONIZER

Using ionizer (an antistatic blower) is recommended at working area in order to reduce electro-static voltage.

4) REMOVING PROTECTION FILM

When removing protection film from LCD panel, peel off the film slowly (more than three seconds) from the edge of the panel with round-ended tweezers or adhesive tape while blowing with ionizer toward the peeling face to minimize ESD which may damage electrical circuit.

5) Be careful with touching metal portion of testing instruments in order to prevent unnecessary ESD.

6) Do not touch the electrode area of PCB and electrical parts like LSI, capacitor, connector pin, etc.

3-3 DUST AND STAIN PREVENTION

1) WORKING AREA

Reduce dust level in working area. Especially the level of metal particle should be decreased, otherwise electrical circuit in LCD module may be damaged due to short circuit by metal particles.

2) PROTECTION FILM

LCD module may be shipped with "protection film" on LCD panel in order to prevent from scratches and dust.
It is recommended to remove the film at later process of assembling.

3) FINGER PRINT

Use finger stalls or soft and dust-free gloves in order to keep clean appearance of LCD module when handled for incoming inspection and assembly.

4)* WIPING OFF DUST ON THE PANEL

When LCD panel becomes dirty, wipe the panel surface off softly with absorbent cotton or another soft cloth.
If necessary, breathe upon the panel surface and then wipe off immediately and softly again.
Be careful not to spill organic solvents into the inside of LCD module. The solvents may damage driver IC and PCB area used inside module.
The polarizer laminated to LCD panel and adhesives may be damaged by the solvents, so do not use any organic solvents for wiping off LCD panel.

5) ADHESIVE ON LCD PANEL

Be careful not to attach adhesive, grease, etc., on LCD panel, because it is difficult to remove them without any damages on LCD panel.

6)* WATER SPOTS ON THE PANEL

Avoid the dewing or water condensation.
Wipe off a spot or spots of water or mist on LCD panel softly with absorbent cotton or another cloth as soon as possible if happened, otherwise discoloration or stain may be caused. If water invades into LCD module, it may cause LCD module damages.

7) GAS

Do not expose LCD module to any gas which is not normally contained in the atmosphere, it may cause mis-operation or defects.

3-4 BENDING / TWISTING OF LCD MODULE DURING ASSEMBLY

1) INSTALLING LCD MODULE TO THE ENCLOSURE

Do not bend or twist LCD module even momentary when LCD module is installed into an enclosure of the system.
Bending or twisting LCD module may cause its damages.

2) FASTENING SCREWS

Fasten screws for mounting holes uniformly, otherwise bending / twisting force may be applied to LCD module.

3) INTERFACE

Do not fasten screws, with catching interface FPC between LCD module and the enclosure.
This may cause bending of LCD module, or become the cause of a failure by damaging FPC.

3-5 MECHANICAL FORCES

1)* STRONG MECHANICAL SHOCK

Avoid strong mechanical, such as dropping the LCD from the working bench, or knocking it against a hard object. These may cause the glass panel to crack or other mis-operation.

2)* EXCESSIVE FORCE

Avoid applying excessive force, like pushing the surface of LCD panel. This may cause scratches or breakage of the panel, or a failure of the module.

3)* PRESSURE ON THE PANEL

Do not put heavy object such as tools, books, etc./ and do not pile up LCD modules.

Be careful not to touch surface of the polarizer laminated to the panel with any hard and sharp object. The polarizer is so soft that it can be easily scratched, even the protect film covers it.

4)* SCRATCHES ON REAR SIDE

Don't push at oblique lines of drawing mentioned below.

This LCD module uses light guide. If light guide is pushed, there is danger of appearance of white spot or black spot.

And if circuit board is pushed, there is danger of damage.

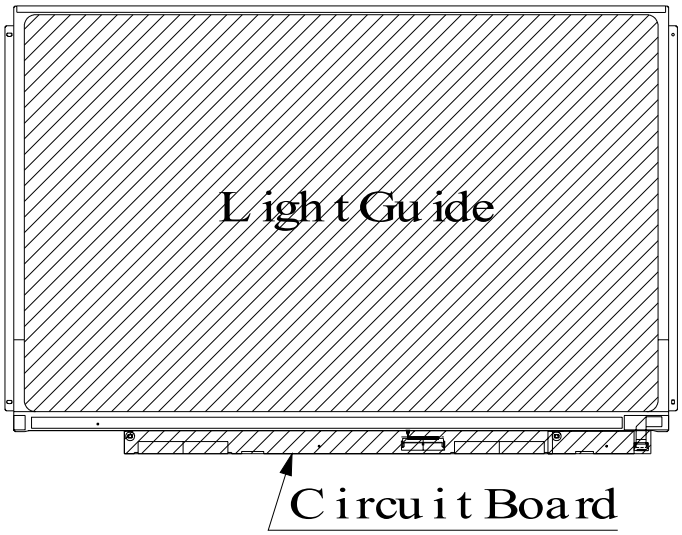

5) CONNECTORS

When inserting or disconnecting the connectors to LCD module, be sure not to apply force against PCB nor connecting cables, otherwise internal connection of PCB and TAB drivers may be damaged.

Do not fasten screws while putting cables like those for interface between LCD module and the enclosure.

3-6 OPERATION

Be sure that the following caution should be taken under assembly and inspection of the system.

1) POWER SUPPLY

Power supplies should always be turned off during assembly process.

Do not connect or disconnect the power cables and connectors with power applied to LCD module.

This may cause damage to the LCD module circuit.

2) INPUT SIGNAL

The signal should be applied after power supplies are turned on.

The signal should be removed before power supplies are turned off.

The detailed sequence of power supplies and signals are described in individual specifications.

3) LCD LONG PERIOD OPERATION

In case of LCD long period operation, discoloration of light guide or optical sheet will be happened due to ultra violet and heat from LED. As the result, there is possibility to have out of specification for the optical characteristic as “5.2”. But this is not irregular phenomena. Moreover, LED also has the characteristic of color shift by long period operation.

4) LED life

Please note that LED life will be shorter than the average life described in the Specification if the ambient temperature is higher than 25°C.

When replacing LCD module, turn off supply voltage and input signal to the LCD module, surely disconnect the power supply to the circuit for lighting the backlight (not only by turning off the control signal to ON/OFF terminal etc.), and then replace the LCD module.

For Transportation and Storage

1) TEMPERATURE

Do not store LCD modules in a high temperature and high humidity condition, higher than 35ºC and 70%(RH) for a long term, meaning about one month or more, otherwise this may deteriorate the quality of the display.
When you unavoidably store LCD modules for a long time, store between 0 and 35ºC, with a relative humidity 70% or lower.

2) LOW TEMPERATURE

Be careful not to leave it where the temperature is below specified storage temperature because the liquid crystal of the display panel may be damaged.

3) ULTRA VIOLET RAY

Store LCD module without exposure to direct sunlight or fluorescent lamps in order to prevent the module from strong ultra violet ray.

4) CLEANLINESS

Keep the module in clean place, because any dust, hard particle may damage the polarizer, or dust invades the inside of the module.

5)* CONDENSATION OF WATER

The modules should be stored under a condition where no condensation of water is allowed. It may cause mis-operation or defects. Be especially careful not to make a module work under the condition that condensation of water appears.

6) GAS

Among some of cardboards and rubber parts etc. generates corrosive gas, so it is advisable to confirm its reliability on the whole set or its packed condition.

7) PACKAGING

In case of transportation or storage after opening the original packaging, LCD modules are recommended to be repacked into the original packaging with the same method, especially with same kind of desiccant.

- CONTENTS -

Revision History · · · · Sheet 1
Caution and Handling Precaution · · · · 2
1. Scope · · · · 13
2. Product Specifications · · · · 13
2.1 General Specifications
2.2 Absolute Maximum Ratings
2.3 Mechanical Specifications
2.3.1 Weight
2.3.2 Dimensional Outline
2.4 Electrical Specifications
2.4.1 Circuit Diagram
2.4.2 Sequence of Power Supplies and Signals
2.4.3 Timing Chart
2.4.4 Timing Specifications
2.4.5 Interface Connector
2.4.6 Colors Combination Table
3. Recommended Operating Conditions · · · · 24
4. Electrical Characteristics · · · · 25
4.1 Test Conditions
4.2 Specifications
5. Optical Characteristics · · · · 26
5.1 Test Conditions
5.2 Optical Specifications
6. Quality · · · · 27
6.1 Inspection AQL
6.2 Test Conditions
6.3 Dimensional Outline
6.4 Appearance Test
6.4.1 Test Conditions
6.4.2 Specifications
6.5 Display Quality
6.5.1 Test Conditions
6.5.2 Specifications
6.6 Reliability Test
6.6.1 Test Conditions
6.6.2 Specifications
6.7 Labels
7. Lifetime · · · · 32
7.1 Module
7.2 Lamp
7.2.1 Test Conditions
7.2.2 Specifications
8. Packaging · · · · 33
8.1 Carton
9. Warranty · · · · 34
10. Regulation · · · · 34
11. Measuring Method · · · · 34
11.1 Measuring Systems
11.2 Measuring Methods
12. EDID · · · · 37

1. Scope

This specification is applicable to Toshiba Matsushita Display Technology's 33.7cm diagonal size TFT-LCD module "LTD133EWDD" designed for Note PC.

2. Product Specifications

2.1 General Specifications

Item	Specifications	
Display Mode	TN color(64 gray scales, 262,144 colors) Transmissive type, Normally white	
Viewing Direction	6 o'clock (in direction of maximum contrast)	
Driving Method	TFT active matrix	
Input Signals	LVDS interface CLK+,CLK- IN0+,IN0- IN1+,IN1- IN2+,IN2-	
Active Area	286.08 (*W*) × 178.8 (*H*) (mm)	
Viewing Area	288.08 (*W*) × 180.8 (*H*) (mm)	
Number of Pixels	1280 (*W*) × 800 (*H*) [1)]	
Pixel Pitch	0.2235 (*W*) × 0.2235 (*H*) (mm) [1)]	
Pixel Arrangement	RGB vertical stripes [1)]	
Surface Treatment	Anti-Reflection and hard coat 2H on LCD surface	←#
Backlight	LED backlight (60 LEDs)	
Dimensional Outline	296.0 (*W*) × 202.4 (*H*) × 2.7* (*D*) (mm) * Display Area 3.3**(*D*)(mm) ** Heat sink and PCB Components The thickness value does not include warp of LCD panel.	
Weight	245 g max.	
UL file number	E215238	←#

Note 1)

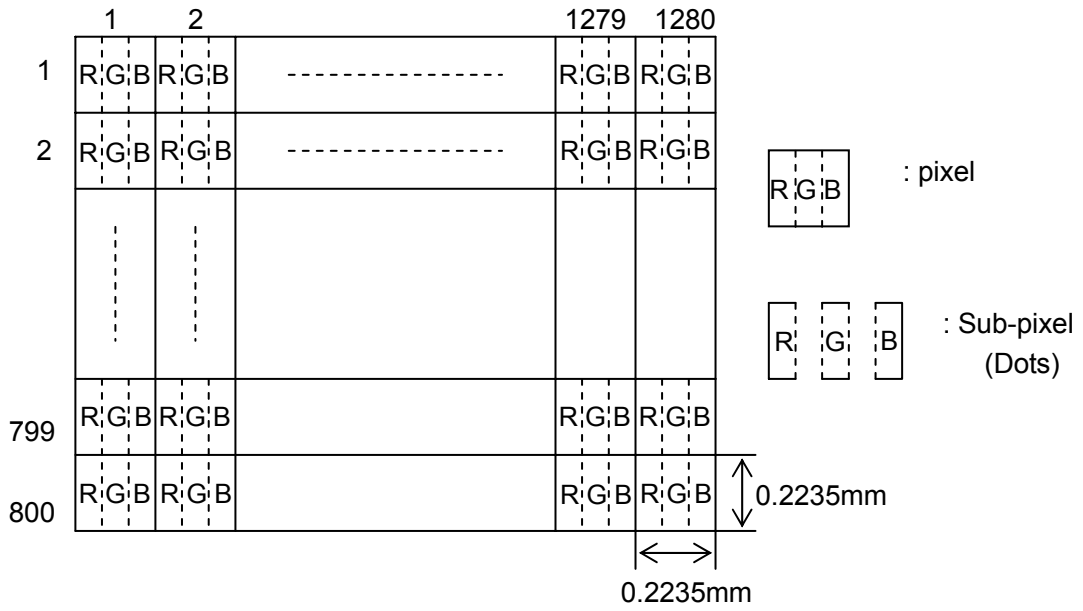

2.2 Absolute Maximum Ratings [1)]

Item	Symbol	Min.	Max.	Unit	Checked Terminal [4)]
Supply Voltage	V_{DD}	-0.3	+4.0	V	V_{DD} - GND
Input Voltage of Signals	V_{IN}	-0.3	V_{DD}+0.3	V	LVDS interface
Operating Ambient Temperature [2)]	T_{OP}	0	+50	°C	
Operating Ambient Humidity [2)]	H_{OP}	10	90	%(RH)	
Storage Temperature [2)]	T_{STG}	-20	+60	°C	
Storage Humidity [2)]	H_{STG}	10	90	%(RH)	
Operating Temperature for Panel [3)]	-	0	+60	°C	

Note1) Do not exceed the maximum rating values under the worst probable conditions taking into account the supply voltage variation, input voltage variation, variation in part constants, and ambient temperature and so on. Otherwise the module may be damaged.

2) Wet bulb temperature should be 39°C Max, and no condensation of water. See figure below.

3) The surface temperature caused by self heat radiation of cell itself is specified on this item.

4) Refer to 2.4.5

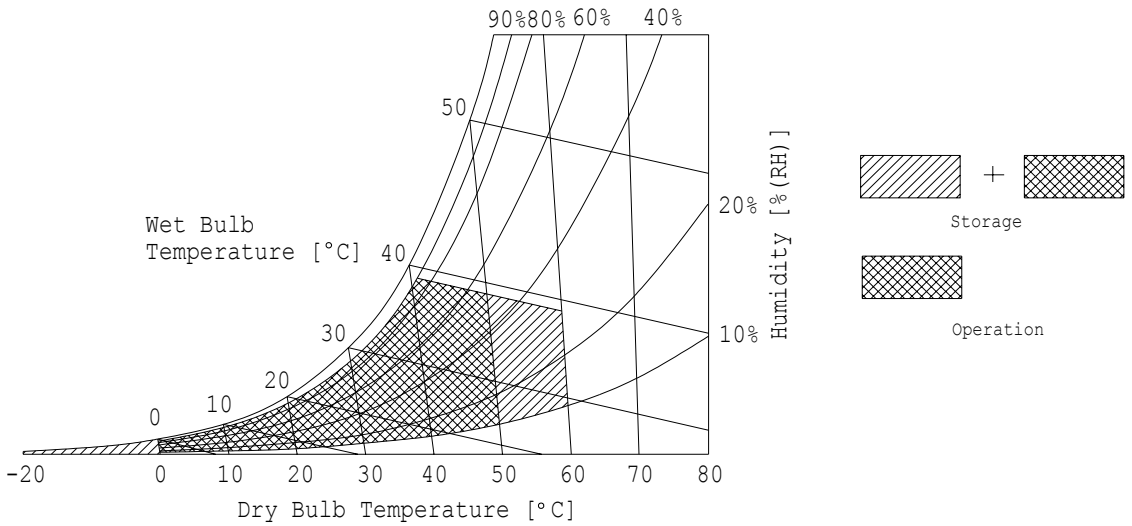

2.3 Mechanical Specifications

2.3.1 Weight

245 (g) (max.)

2.3.2 Dimensional Outline

Unit : mm ←#

Standard Tolerance: ±0.5

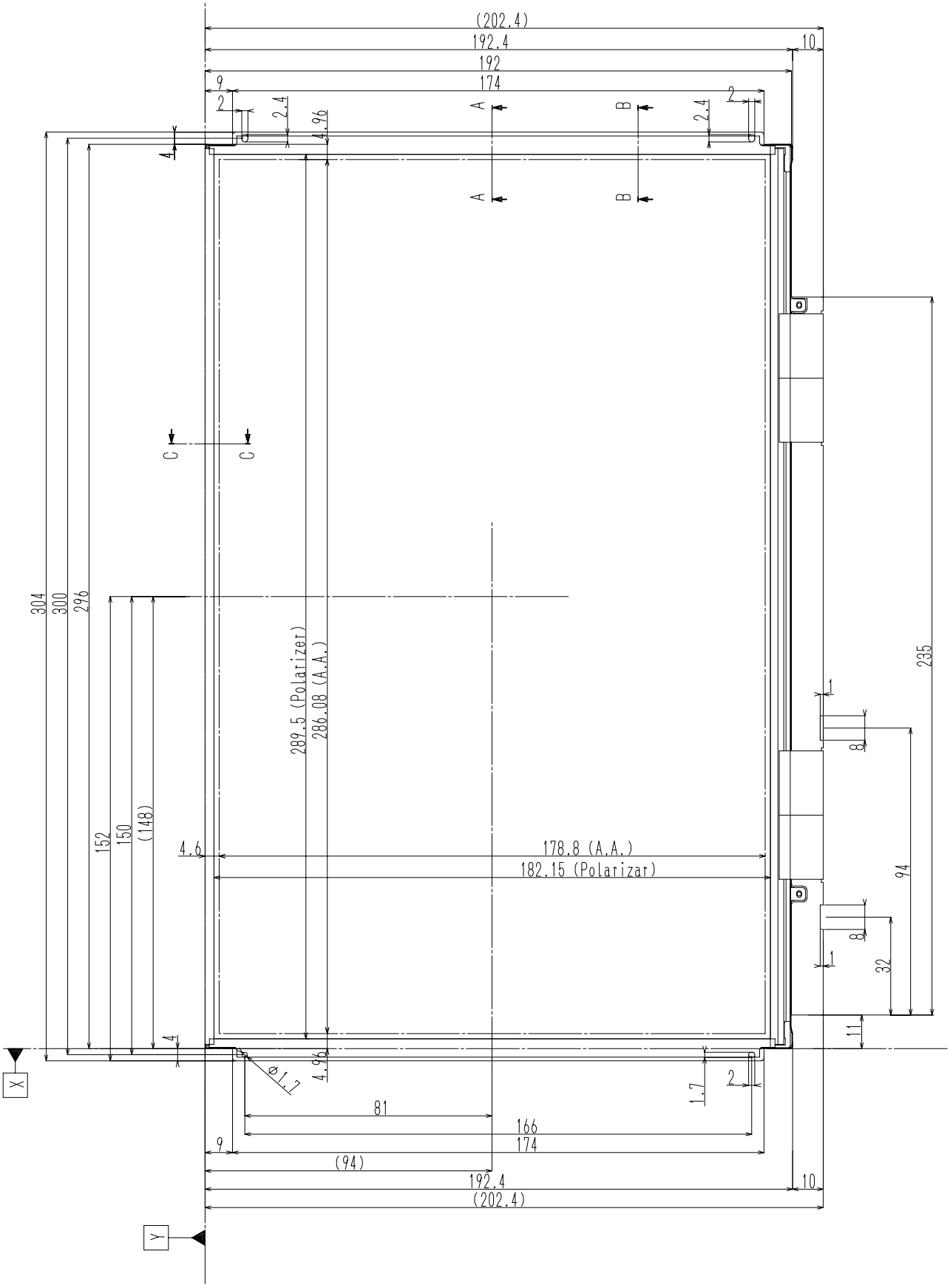

Toshiba Matsushita Display Technology Co.,Ltd	Date: 2007-06-19 New No. LTD133EWDD-14 Date: Old

←# Special ←& Addition ← Change

(Rear side)

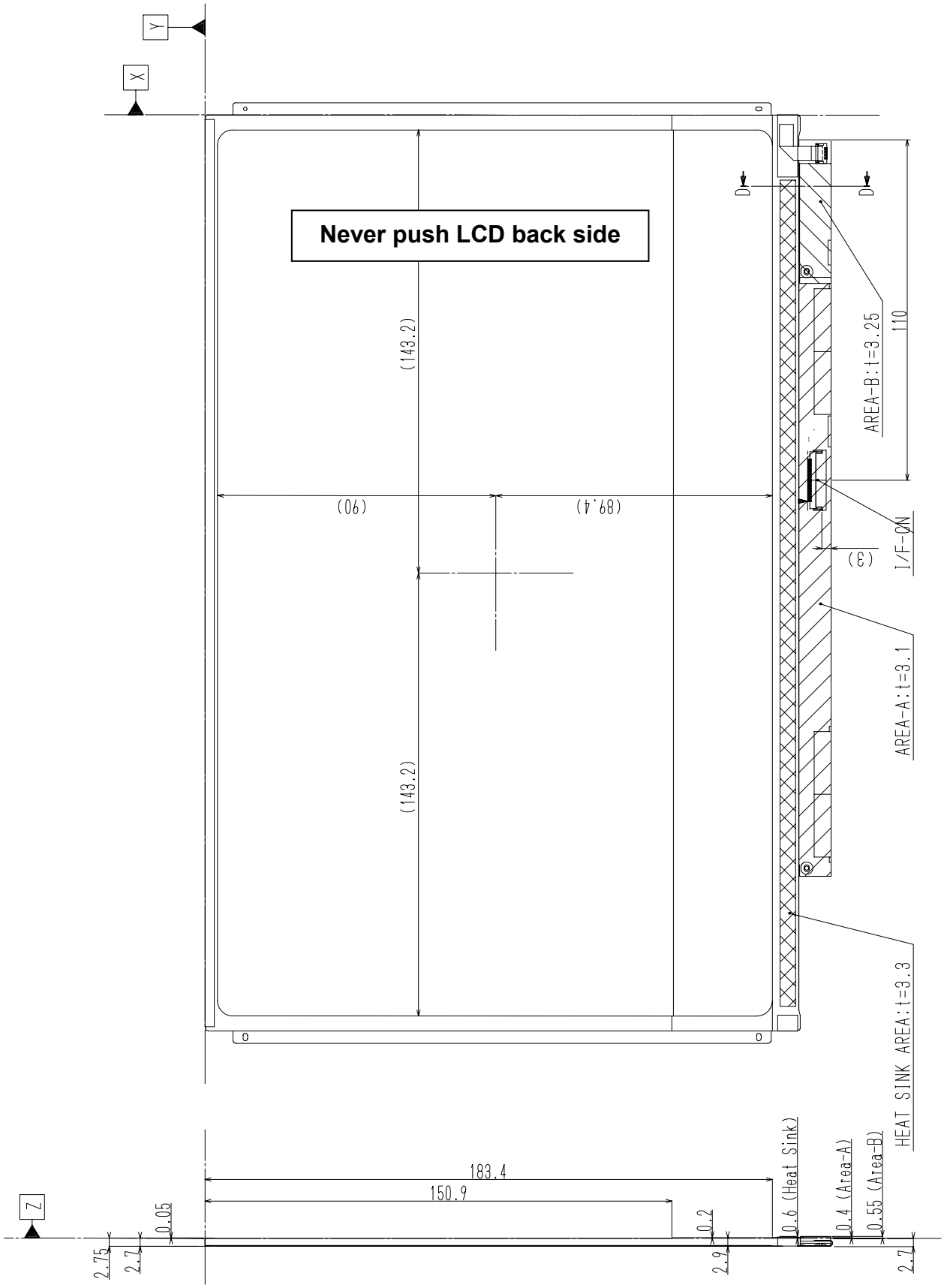

Note) Never push LCD back side. If LCD back side was pressed, It may cause damage of the back light System.

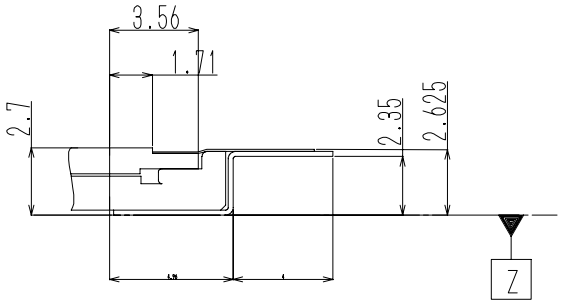

Cross section A-A (S=1/5)

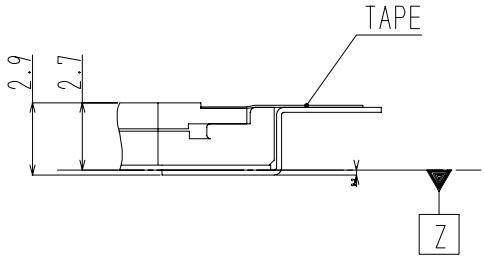

Cross section B-B (S=1/5)

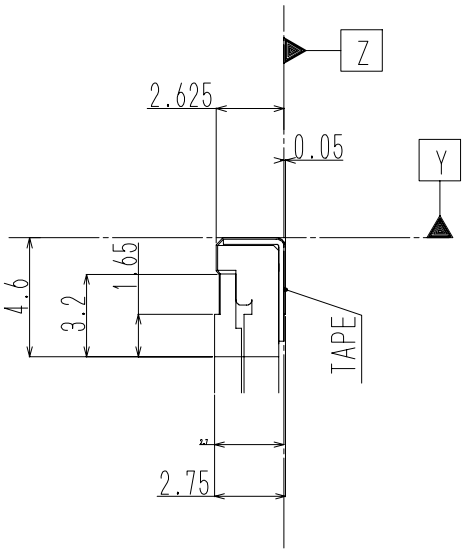

Cross section C-C (S=1/5)

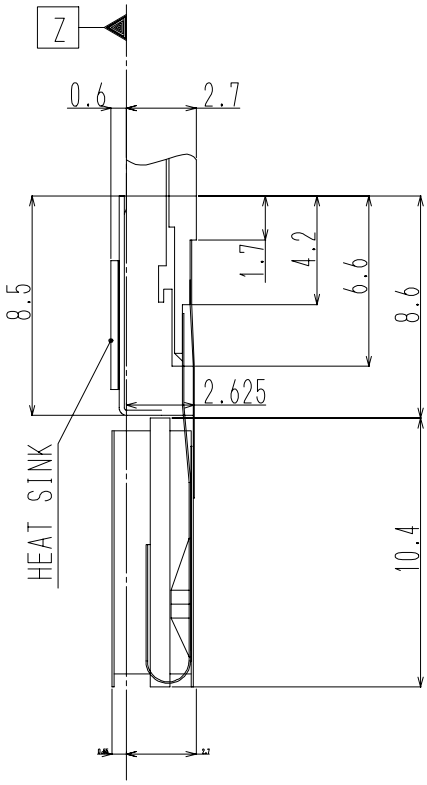

Cross section D-D (S=1/5)

2.4 Electrical Specifications

2.4.1 Circuit Diagram

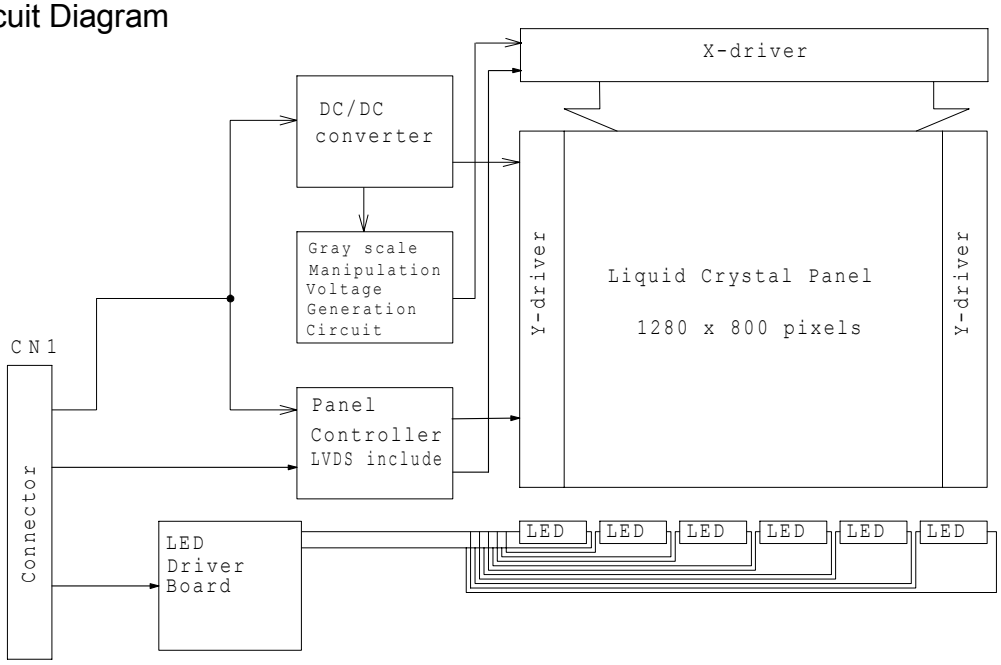

2.4.2 Sequence of Power Supplies and Signals

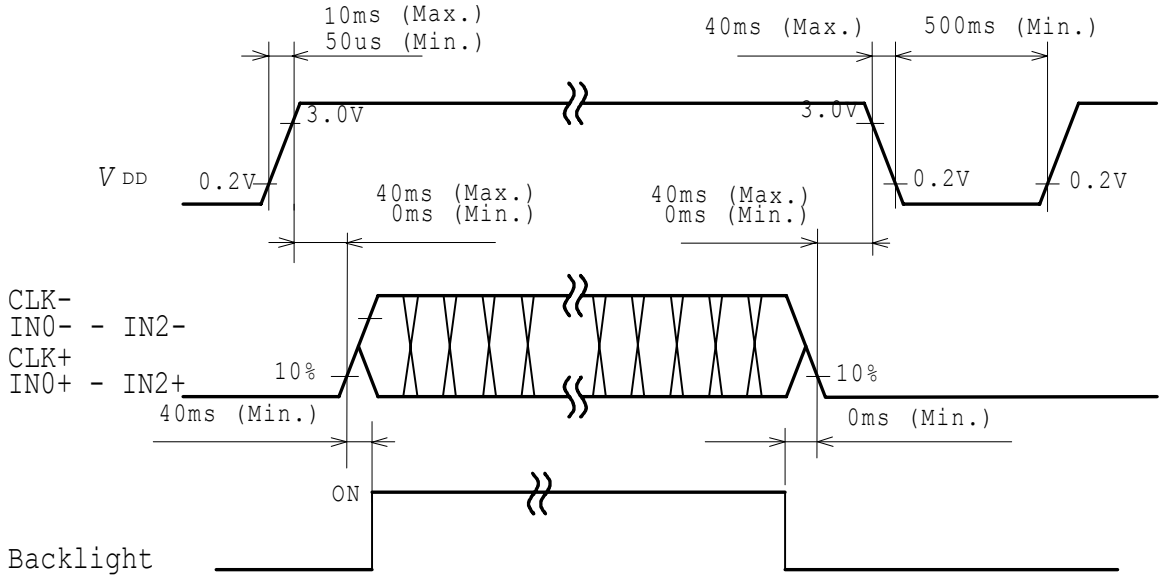

2.4.3 Timing Chart

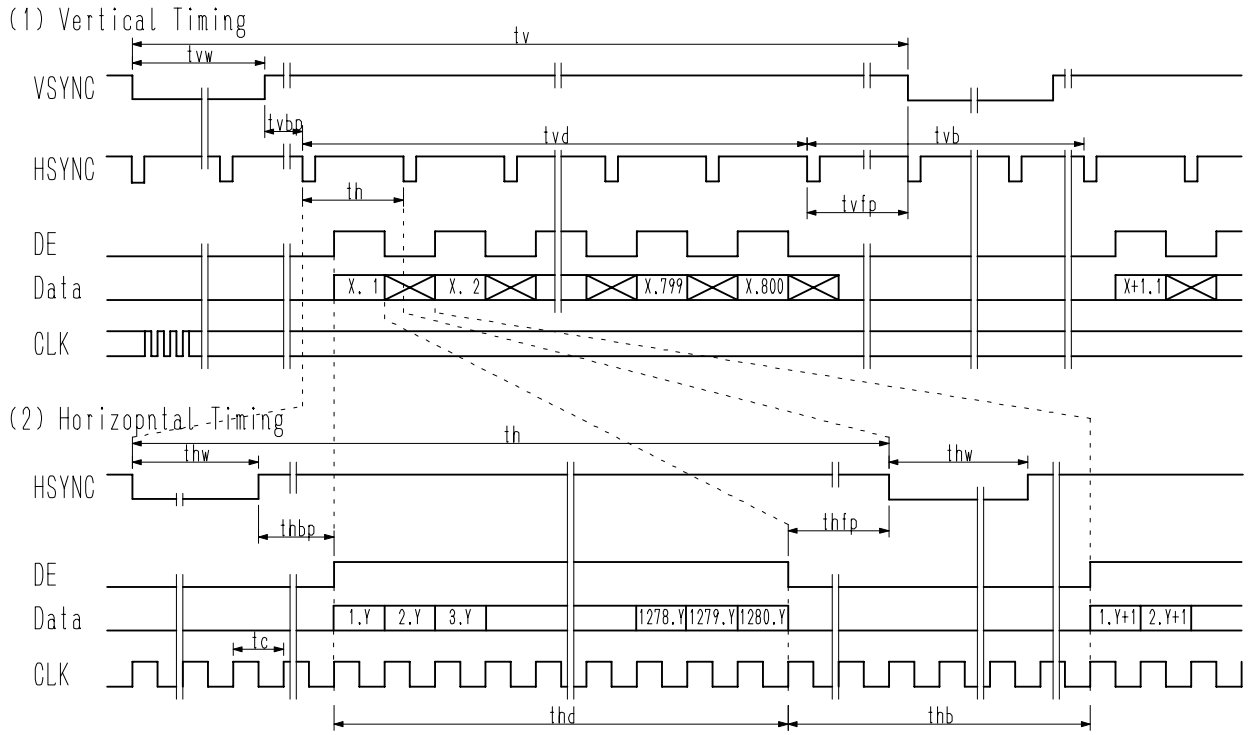

2.4.4 Timing Specifications 1) 2) 3) 4) 5) 6) 7)

Item	Symbol	min.	typ.	max.	unit
Horizontal Scanning Term	*th*	-	1448 x *tc*	-	clock
H-sync Pulse Width	*th*w	4 x *tc*	32 x *tc*	-	clock
Horizontal Front Porch	*th*fp	4 x *tc*	48 x *tc*	-	clock
Horizontal Back Porch	*th*bp	4 x *tc*	80 x *tc*	-	clock
Horizontal Blanking Period(*8)	*th*b	-	168 x *tc*	-	clock
Horizontal Display Term	*th*d	1280 x *tc*	1280 x *tc*	1280 x *tc*	clock
Frame Period	*tv*	-	830 x *th*	-	line
V-sync Pulse Width	*tv*w	1 x *th*	6 x *th*	-	line
Vertical Front Porch	*tv*fp	1 x *th*	3 x *th*	-	line
Vertical Back Porch	*tv*bp	2 x *th*	14 x *th*	-	line
Vertical Blanking Period(*9)	*tv*b	-	30 x *th*	-	line
Vertical Display Term	*tv*d	800 x *th*	800 x *th*	800 x *th*	line
Clock Period	*tc*	-	13.87	-	ns

Note 1) Refer to “Timing Chart” and LVDS (DS90CF364, DS90CF384) specifications by National semiconductor corporation.

Note 2) If DE is fixed to "H" or "L" level for certain period while CLK is supplied, the panel displays black with some flicker.

Note 3) If CLK is fixed to "H" or "L" level for certain period while DE is supplied, the panel may be damaged.

Note 4) Please adjust LCD operating signal timing and FL driving frequency, to optimize the display quality.
There is a possibility that flicker is observed by the interference of LCD operating signal timing and FL driving condition (especially driving frequency), even if the condition satisfies above timing specifications and recommended operating conditions shown in 3.

Note 5) Do not make *tv*, *th*, *th*bp and tvb fluctuate.
If *tv*, *th*, *th*bp and *tv*b are fluctuate, the panel displays black.

Note 6) In case of using the long frame period, the deterioration of display quality, noise etc. may be occurred.

Note 7) CLK count of each Horizontal Scanning Time should be always the same.
V-Blanking period should be “*n*” X “Horizontal Scanning Time”. (*n*: integer)
Frame period should be always the same.

Note 8) *th*b= *th*w + *th*fp + *th*bp

Note 9) *tv*b= *tv*w + *tv*fp + *tv*bp

2.4.5 Interface Connector

CN1 INPUT SIGNAL (20347-040E-02 / I-PEX)

[Mating Connector : 20345-*40T-## / I-PEX] ←#

Terminal No.	Symbol	Function
1	GND	GND
2	CONNTST	Connector test (Pin 2 & 37 are connected together on the board)
3	VDD	Power Supply : +3.3V
4	VDD	Power Supply : +3.3V
5	VDD	Power Supply : +3.3V
6	VEDID	EDID 3.3V power
7	BIST	Panel self test
8	CLK	EDID clock
9	DATA	EDID data
10	GND	GND
11	GND	GND
12	NC	Non-Connection
13	RxIN0-	Negative LVDS differential data input (R0-R5, G0)
14	RxIN0+	Positive LVDS differential data input (R0-R5, G0)
15	GND	GND
16	RxIN1-	Negative LVDS differential data input (G1-G5, B0-B1)
17	RxIN1+	Positive LVDS differential data input (G1-G5, B0-B1)
18	GND	GND
19	RxIN2-	Negative LVDS differential data input (B2-B5, HS, VS, DE)
20	RxIN2+	Positive LVDS differential data input (B2-B5, HS, VS, DE)
21	GND	GND
22	CLK-	Clock Signal(-)
23	CLK+	Clock Signal(+)
24	GND	GND
25	PWM	PWM brightness control
26	VBL-	LED power return
27	VBL-	LED power return
28	VBL-	LED power return
29	VBL-	LED power return
30	VBL-	LED power return
31	NC	Non-Connection
32	VBL+	7.5V - 21V LED power
33	VBL+	7.5V - 21V LED power
34	VBL+	7.5V - 21V LED power
35	VBL+	7.5V - 21V LED power
36	VBL+	7.5V - 21V LED power
37	CONNTST	Connector test (Pin 2 & 37 are connected together on the board)
38	SMB_CLK	SMBus Clock
39	SMB_DAT	SMBus Data
40	GND	GND

Note 1) Please connect GND pin to ground. Don't use it as no-connect nor connection with high impedance.

Note 2) Please connect NC pin to nothing. Don't connect it to ground nor to other signal input.

RECOMMENDED TRANSMITTER (THC63LVDM63B) TO LTD133EWDD INTERFACE ASSIGNMENT

Case1: 6bit Transmitter

THC63LVDM63B					LTD133EWDD Interface (CN1)	
Input Terminal No.		Input Signal (Graphics controller output signal)		Output Signal Symbol		
Symbol	Terminal	Symbol	Function		Terminal	Symbol
TIN0	44	R0	Red Pixels Display Data (LSB)	TOUT0- TOUT0+	No.13 No.14	IN0- IN0+
TIN1	45	R1	Red Pixels Display Data			
TIN2	47	R2	Red Pixels Display Data			
TIN3	48	R3	Red Pixels Display Data			
TIN4	1	R4	Red Pixels Display Data			
TIN5	3	R5	Red Pixels Display Data (MSB)			
TIN6	4	G0	Green Pixels Display Data (LSB)			
TIN7	6	G1	Green Pixels Display Data	TOUT1- TOUT1+	No.16 No.17	IN1- IN1+
TIN8	7	G2	Green Pixels Display Data			
TIN9	9	G3	Green Pixels Display Data			
TIN10	10	G4	Green Pixels Display Data			
TIN11	12	G5	Green Pixels Display Data (MSB)			
TIN12	13	B0	Blue Pixels Display Data (LSB)			
TIN13	15	B1	Blue Pixels Display Data			
TIN14	16	B2	Blue Pixels Display Data	TOUT2- TOUT2+	No.19 No.20	IN2- IN2+
TIN15	18	B3	Blue Pixels Display Data			
TIN16	19	B4	Blue Pixels Display Data			
TIN17	20	B5	Blue Pixels Display Data (MSB)			
TIN18	22	HSYNC	H-Sync			
TIN19	23	VSYNC	V-Sync			
TIN20	25	DE	Compound Synchronization Signal			
CLK IN	26	CLK	Data Sampling Clock	TCLK OUT- TCLK OUT+	No.22 No.23	CLK- CLK+

Note 1) Please connect NC pin to nothing. Don't connect it to ground nor to other signal input.

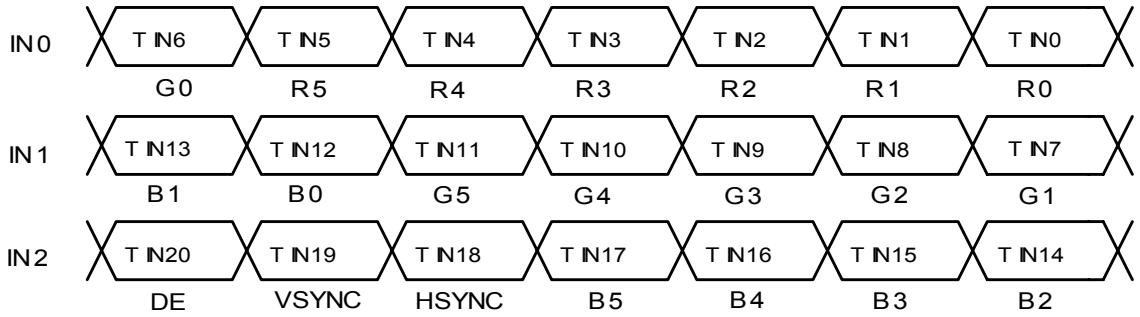

2.4.6 Colors Combination Table

	Display	R5	R4	R3	R2	R1	R0	G5	G4	G3	G2	G1	G0	B5	B4	B3	B2	B1	B0	Gray ScaleLevel
Basic Color	Black	L	L	L	L	L	L	L	L	L	L	L	L	L	L	L	L	L	L	-
	Blue	L	L	L	L	L	L	L	L	L	L	L	L	H	H	H	H	H	H	-
	Green	L	L	L	L	L	L	H	H	H	H	H	H	L	L	L	L	L	L	-
	Light Blue	L	L	L	L	L	L	H	H	H	H	H	H	H	H	H	H	H	H	-
	Red	H	H	H	H	H	H	L	L	L	L	L	L	L	L	L	L	L	L	-
	Purple	H	H	H	H	H	H	L	L	L	L	L	L	H	H	H	H	H	H	-
	Yellow	H	H	H	H	H	H	H	H	H	H	H	H	L	L	L	L	L	L	-
	White	H	H	H	H	H	H	H	H	H	H	H	H	H	H	H	H	H	H	-
Gray Scale of Red	Black	L	L	L	L	L	L	L	L	L	L	L	L	L	L	L	L	L	L	L 0
	Dark ↑ ↓ Light	L	L	L	L	L	H	L	L	L	L	L	L	L	L	L	L	L	L	L 1
		L	L	L	L	H	L	L	L	L	L	L	L	L	L	L	L	L	L	L 2
		:						:						:						L3...
		:						:						:						L60
		H	H	H	H	L	H	L	L	L	L	L	L	L	L	L	L	L	L	L61
		H	H	H	H	H	L	L	L	L	L	L	L	L	L	L	L	L	L	L62
	Red	H	H	H	H	H	H	L	L	L	L	L	L	L	L	L	L	L	L	Red L63
Gray Scale of Green	Black	L	L	L	L	L	L	L	L	L	L	L	L	L	L	L	L	L	L	L 0
	Dark ↑ ↓ Light	L	L	L	L	L	L	L	L	L	L	L	H	L	L	L	L	L	L	L 1
		L	L	L	L	L	L	L	L	L	L	H	L	L	L	L	L	L	L	L 2
		:						:						:						L3...
		:						:						:						L60
		L	L	L	L	L	L	H	H	H	H	L	H	L	L	L	L	L	L	L61
		L	L	L	L	L	L	H	H	H	H	H	L	L	L	L	L	L	L	L62
	Green	L	L	L	L	L	L	H	H	H	H	H	H	L	L	L	L	L	L	Green L63
Gray Scale of Blue	Black	L	L	L	L	L	L	L	L	L	L	L	L	L	L	L	L	L	L	L 0
	Dark ↑ ↓ Light	L	L	L	L	L	L	L	L	L	L	L	L	L	L	L	L	L	H	L 1
		L	L	L	L	L	L	L	L	L	L	L	L	L	L	L	L	H	L	L 2
		:						:						:						L3...
		:						:						:						L60
		L	L	L	L	L	L	L	L	L	L	L	L	H	H	H	H	L	H	L61
		L	L	L	L	L	L	L	L	L	L	L	L	H	H	H	H	H	L	L62
	Blue	L	L	L	L	L	L	L	L	L	L	L	L	H	H	H	H	H	H	Blue L63
Gray Scale of White & Black	Black	L	L	L	L	L	L	L	L	L	L	L	L	L	L	L	L	L	L	L 0
	Dark ↑ ↓ Light	L	L	L	L	L	H	L	L	L	L	L	H	L	L	L	L	L	H	L 1
		L	L	L	L	H	L	L	L	L	L	H	L	L	L	L	L	H	L	L 2
		:						:						:						L3...
		:						:						:						L60
		H	H	H	H	L	H	H	H	H	H	L	H	H	H	H	H	L	H	L61
		H	H	H	H	H	L	H	H	H	H	H	L	H	H	H	H	H	L	L62
	White	H	H	H	H	H	H	H	H	H	H	H	H	H	H	H	H	H	H	White L63

Note1 L: Low level voltage, H: High level voltage

3. Recommended Operating Conditions [1) 2) 3)]

Item	Symbol	Min.	Typ.	Max.	Unit	Remarks
Supply Voltage [3)]	V_{DD}	3.0	3.3	3.6	V	
Differential Input Voltage[2) 4)]	V_{ID}	0.1	-	0.6	V	
Common Mode Input Voltage [4)]	V_{CM}	0.7	-	1.75	V	
LVDS Clock Frequency	f_{IN}	25	-	85	MHz	

Note 1) The module should be always operated within these ranges. The "Typ." shows the recommendable value.

2) Recommended LVDS transmitter: THC63LVDF63A,THC63LVDM63A,THC63LVDM63A-85,THC63LVDF83A, THC63LVDM83A,THC63LVDM83A-85 (made by THine Electronics,Inc.)

3) LVDS is based on TIA/EIA 644

4) Checked Pin Terminal: V_{DD}, GND (0V)

5) Checked Pin Terminal: IN0-～CLK+, GND (0V)

Measure: $|V_{IN0+}-V_{IN0-}|$, $|V_{IN1+}-V_{IN1-}|$, $|V_{IN2+}-V_{IN2-}|$
$|V_{CLKN+}-V_{CLK-}|$

Measure: $(V_{IN0+}-V_{IN0-})/2$, $(V_{IN1+}-V_{IN1-})/2$,
$(V_{IN2+}-V_{IN2-})/2$, $(V_{CLK+}+-V_{CLK-})/2$,

Back light Control (SMBus Communication) ←#

SMBus Command :

Command	Note
08h	10
0Ch	17
10h	24
14h	30
28h	60
50h	120
7Fh	190
D8h	300

Unit : cd/m^2

4. Electrical Characteristics

4.1 Test Conditions

Ambient Temperature	: T_a	25±5°C
Ambient Humidity	: H_a	65±20%(RH)
Supply Voltage	: V_{DD}	3.3V
	V_{LED}	12.0V
Input Signal	: Refer typical value in "2.4.4 Timing Specifications".	

4.2 Specifications

Item	Symbol	Min.	Typ.[1)]	Max.	Unit	Remark	
Current Consumption	I_{DD}	-	300	400	mA	V_{DD} Terminal Current	
	I_{LEDH}	-	260	330	mA	H setting product	←&
	I_{LEDL}	-	310	380	mA	L setting product	←&

Note 1) The Typical value of I_{DD} is measured in the following pattern.

1. White
2. Yellow
3. Purple
4. Red
5. Light Blue
6. Green
7. Blue
6. Black

1	2	3	4	5	6	7	8

5. Optical Characteristics

5.1 Test Conditions

It is same as 4.1

The measuring method is shown in 11.

5.2 Optical Specifications [1)]

←#

Item		Symbol	Conditions		Specifications Min.	Typ	Max.	Unit	Remark
Viewing Angle		θ	CR >= 10	ϕ = 180°	40	-	-	°	
				ϕ = 0°	50	-	-	°	
				ϕ = 90°	50	-	-	°	
				ϕ = -90°	50	-	-	°	
Contrast Ratio		CR	θ=0°, ϕ=0°		500	600	-	-	
Response Time		$\tau_r + \tau_f$	θ=0°, ϕ=0°		-	25	35	ms	L0 - L63
					-	-	70	ms	L32 – L48
Luminance		L	θ=0°, ϕ=0° Gray Scale Level=L63 (White)		250	300	-	cd/m^2	SMBus:D8h (Maximum Brightness) ←
Luminance Uniformity[2)]		LUNF	θ=0°, ϕ=0° Gray Scale Level=L63 (White)		-	-	35	%	13 points
					-	-	20	%	5 points
Chromaticity	Red	x_R	Gray Scale Level:L63 θ=0°, ϕ=0°		0.520	0.580	0.640	-	
		y_R			0.280	0.340	0.400	-	
	Green	x_G	Ditto		0.250	0.310	0.370	-	
		y_G			0.490	0.550	0.610	-	
	Blue	x_B	Ditto		0.095	0.155	0.215	-	
		y_B			0.095	0.155	0.215	-	
	White	x_W	Ditto		0.253	0.313	0.373	-	
		y_W			0.269	0.329	0.389	-	

Note 1): Refer to "11. Measuring Method".

Note 2): The above test limit must be applied for initial use. Characteristics will be shifted by long period operation, but it is not irregular phenomena. Theoretically brightness characteristics will be decreased due to LED degradation and color shift due to optical components change.

6.Quality

6.1 Inspection AQL

Total of Major Defects : AQL 0.65 %

Total of Minor Defects : AQL 1.5 %

Sampling Method :ISO 2859-1:1999 (Level II)

6.2 Test Conditions

1) Ambient Temperature : 25±5°C
2) Ambient Humidity : 65±20%(RH)
3) Illumination : Approximately 500 lx under the fluorescent lamp
4) Viewing Distance : Approximately 30cm by the eyes of the inspector from the module
5) Inspection Angle : θ=0°, ϕ=0°

6.3 Dimensional Outline

The products shall conform to the dimensions specified in 2.3.2.

Definition of Major and Minor defects are as follows.

Item	Description	Class
Important Dimensions	Dimensional outline, Dimensional between the mounting holes(hinge)	Major
Others	Dimensions specified in this specifications	Minor

6.4 Appearance Test

6.4.1 Test Conditions

1) Condition : Non-operating, operating (Pattern : L63 white raster)

Same as 6.2

6.4.2 Specifications ←#

Item	Description	Class
PCB Appearance	Pattern peeling snapping, electrically short	Major
	Repair portion on PCB is not covered by epoxy resign	Minor
Soldering	Cold solder joint, lead move when pulled	Major
Bezel, Frame, Connectors	Distinct stain, rust or scratch	Minor
Extraneous substances[1)2)]	Dark/Bright Spot Bright/Dark Line	Minor
Polarizer	Scratches Dent	Minor
Maximum Allowable Defect Count – All Types	N≤7	Minor

Dark/Bright Spot

Average diameter(mm)	Acceptable count/side
$D \le 0.1$	neglect
$0.1 \le D \le 0.7$	$N \le 4$
$0.7 < D$	$n=0$

Bright/Dark Line

Line Width(mm)	Length(mm)	Acceptable count
$W \le 0.01$	$0.3 \le L \le 1.0$	neglect
$0.01 \le W \le 0.07$		$N \le 4$
$0.07 < W$ or $1.0 < L$		2)

Scratches

Line Width(mm)	Length(mm)	Acceptable count
$W \le 0.01$	$0.3 \le L \le 5.0$	neglect
$0.01 < W \le 0.1$		$n \le 3$
$0.1 < W$ or $5.0 < L$		2)

Dent

Average diameter(mm)	Acceptable count/side
$D \le 0.5$	$n \le 6$
$0.5 < D$	0

Note 1) Inspection area should be within active area

Note 2) Black/White Spot, Polarizer Dents and Polarizer Bubble shall be judged by "Average Diameter".

Average Diameter $D = (a+b)/2$ (mm)

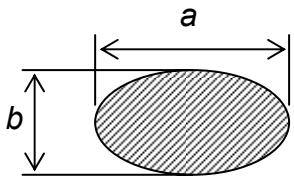

6.5 Display Quality

6.5.1 Test Conditions

1) Inspection Area : Within active area
2) Driving Condition : Same as test conditions shown in 4.1 and 6.2
3) Test Pattern : White display pattern (gray scale level L63) , black display pattern (gray scale level L0) and red, green, blue display pattern (gray scale level L63)

6.5.2 Specifications [4)] ←#

Item	Description / Specifications	Class
Function	No display, Malfunction	Major
Display Quality [1)]	Missing line	Major
	Missing Sub-Pixels 1) Bright defects[2) 3) 4)] : 0pcs. max. 2) Green bright defects : 0pcs. max 3) Dark defects[2) 4)] : 8pcs max. 4) Total defects : 8pcs max. 5) Minimum distance between dark defects : Distance >= 5 mm 6) Dark defect conjunction (2sub-pixels) : 3sets max. 7) Dark defect conjunction (3sub-pixels) : 1sets max.	Major
	Inconspicuous flicker, crosstalk, Newton's ring and other defects : neglect	-
Black and White Spots/lines	Inconspicuous defects : neglect	-
Backlight	Missing (Non-operating)	Major

Note 1) Defects of both color filter and black matrix are counted as bright or dark defects.
Inspection area should be within the active area.
Note 2) Bright defect means a bright spot(sub-pixel) on the display pattern of gray scale L0.
Dark defect means a dark spot(sub-pixel) on the display pattern of gray scale L63.
Note 3) Bright spot which can not be found by using 5%ND-Filter shall not be counted as a defect.
Note 4) Testing is conducted only on RED, GREEN, BLUE, WHITE of gray scale L63,and BLACK of gray scale L0.

RED	GREEN	BLUE	WHITE	BLACK
L63	L63	L63	L63	L0

←#

6.6 Reliability Test

6.6.1 Test Conditions

1) The module should be driven and inspected under normal test conditions.

2) The module should not have condensation of water (moisture) on the module.

3) The module should be inspected after two or more hours storage in normal conditions (15 - 35°C, 45 - 65%(RH)).

4) A module shall be used only for one test.

6.6.2 Specifications ←

The module shall have no failure in the following reliability test items.

Test Item	Test Conditions	Result
High Temperature Operation 1)	50°C 192 h	3p / 3p OK
High Temperature Storage 2)	60°C 192 h	3p / 3p OK
High Temperature and High Humidity operation 1)	50°C 80% 192 h	3p / 3p OK
Low Temperature Operation 1)	0°C 192 h	3p / 3p OK
Low Temperature Storage 2)	-20°C 192 h	3p / 3p OK
Temperature Shock 2)	-20°C ⇔ 60°C 0.5h 0.5h 50 cycles	3p / 3p OK

Note 1) Operating

Note 2) Non-Operating

Definitions of failure for judgment shall be as follows:

1) Function of the module should be maintained.
2) Current consumption should be smaller than the specified value.
3) Appearance and display quality should not have distinguished degradation.
4) Luminance should be larger than 50% of the minimum value specified in 5.2.

6.7 Labels

1) Product Label

unit : mm

Serial number : △△ ▲ 7A 000001
① ② ③ ④

① : Module type code

② : Manufacturing code

③ : Lot code 7 A
(1) (2)

(1):Year code-end of the A.D.

(2):Month code-alphabet → Jan. : A - Dec. :L

Bar code : CODE-39 High-density

(Example : 7A → 2007 JAN.)

④: Serial code

decimal, 6 figures

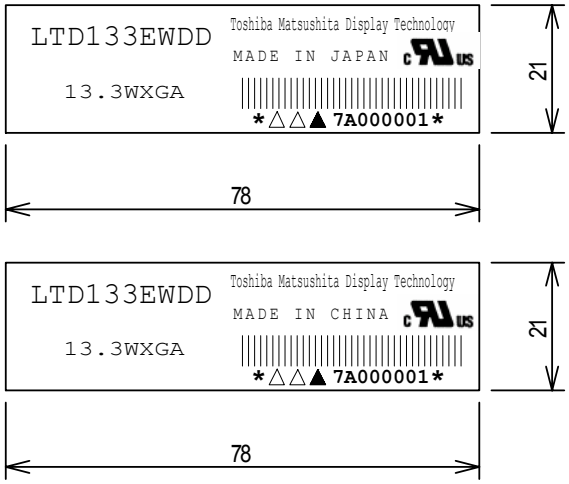

←#

2) PPID Label

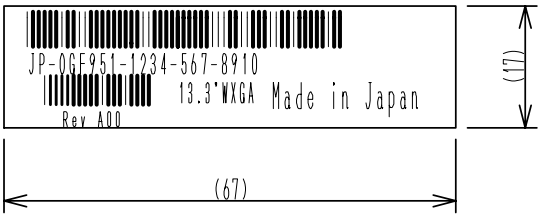

←#

3) Label Locations

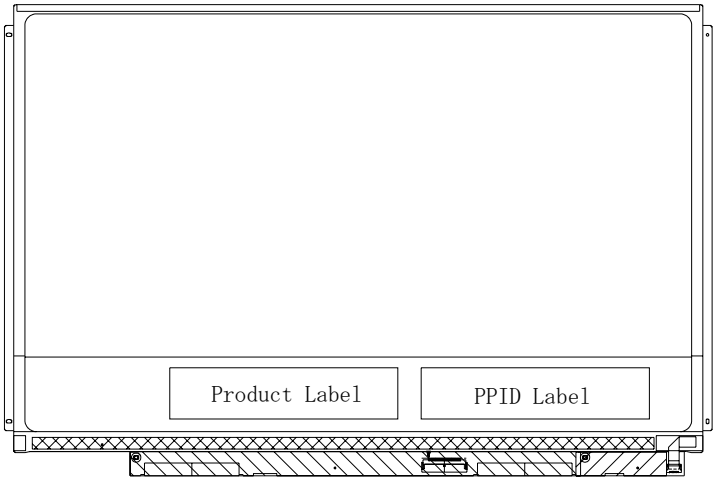

7. Lifetime

7.1 Module (except LED)

MTTF (Mean Time To Failure) : 50,000h

(This value is not assurance time but inference value by following conditions.)

Conditions : Ambient temperature : 25±5°C (No wind)

Ambient humidity : 65%(RH)

7.2 LED

7.2.1 Test Conditions

Ambient temperature	: 25±5°C
Humidity	: 65%(RH)
LED Input Current	: 15mA / 17.5mA
Lighting condition	: continuous lighting

7.2.2 Specifications

MTBF : 10,000 h (@15mA)

7700 h (@17.5mA)

Definitions of failure for judgment shall be as follows.

1) LCD luminance becomes half of the minimum value specified in 5.2.

2) LED doesn't light normally.

(Note1) In case of LCD long period operation, discoloration of light guide or optical sheet will be happened due to ultra violet and heat. As the result, there is possibility to have out of specification for the optical characteristics as “4.3.2”. But this is not irregular phenomena. Moreover, LED also has the characteristic of color shift by long period operation.

8. Packaging

8.1 Carton (internal package)

(1) Packaging Form

Vertical stuffing tray packing

(2) Packaging Method [1) 2)]

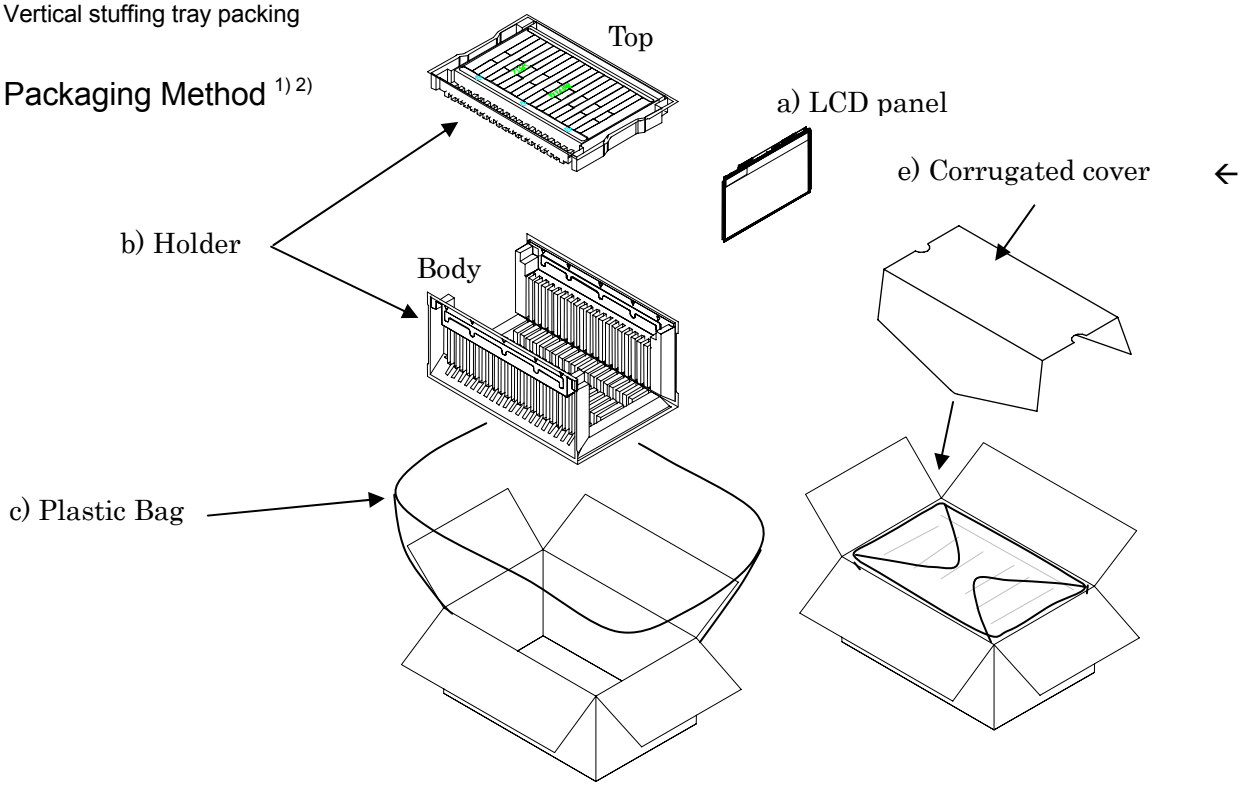

Note 1): Total weight : (Approx.) 6.4 kg
Note 2): Acceptable number of palette piling: 2 sets

(3) Packaging Material

Number	Quantity	Description
a	20p	Static electricity protective sack
b	1set	Holder
c	1p	Plastics Bag
d	1p	Plastics adhesive tape
e	1p	Corrugated Cover

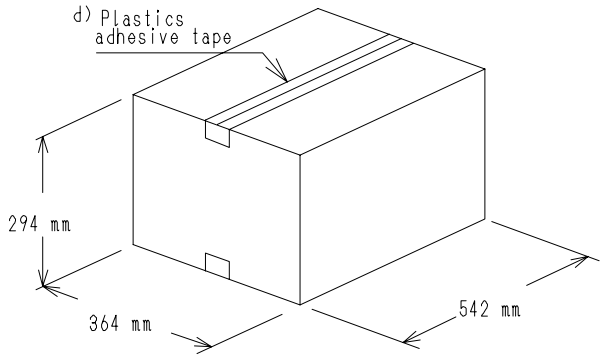

(4) Carton Marking

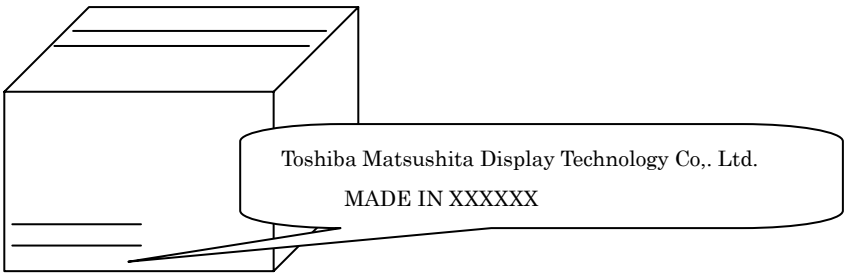

9. Warranty

Warranty clause will be decided separately.

10. Regulation

The set (which our LCD module is assembled into) to conform the regulations below, take measures in set side. Toshiba Matsushita Display Technology is not liable for the regulations to the complete set, nor can guarantee our LCD module conform the regulation by itself.

a) Examples of EMI Regulations

FCC : PART15 CLASS B
VCCI : CLASS B
CISPR : CLASS B

11. Measuring Method

11.1 Measuring System

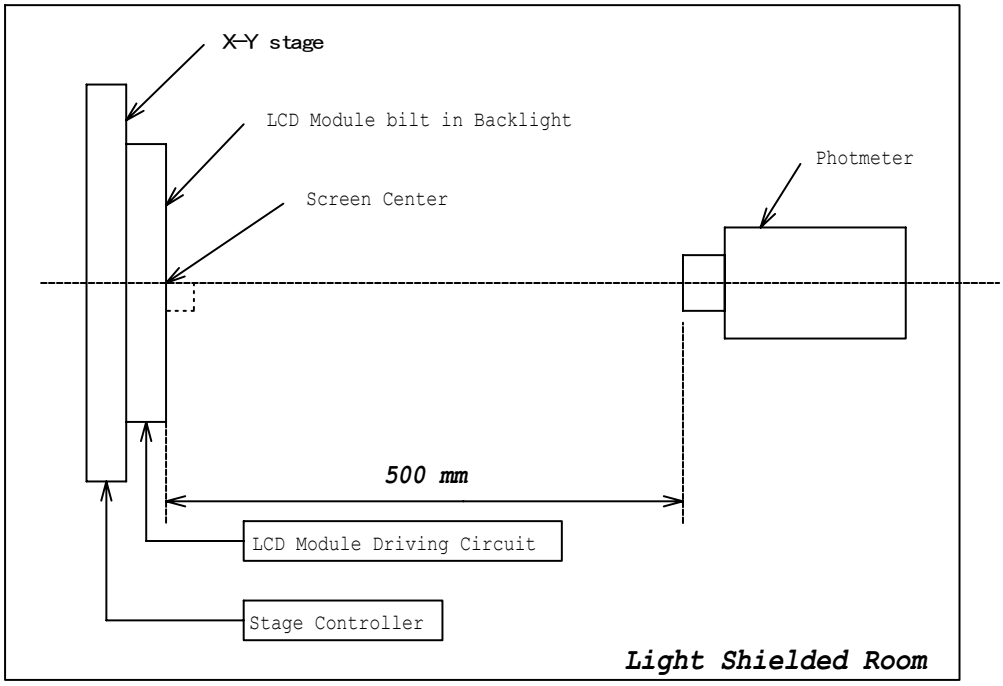

(1) The measurement point is the center of the active area except for the measurement of Luminance Uniformity.

(2) Photometer : BM-5A / BM-7 TOPCON (Aperture 2°)

(3) Definition of ϕ and θ :

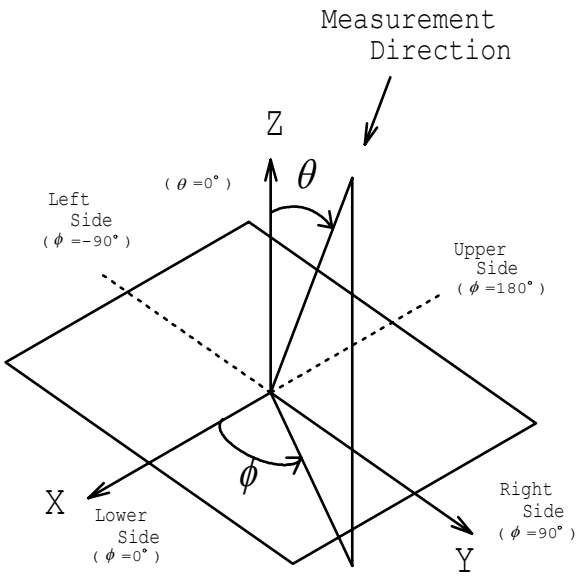

11.2 Measuring Methods

(1) Luminance:

The luminance of the center on a white raster (gray scale level L63) shall be measured.

Measurement shall be executed 30 minutes after the lamp is lit up.

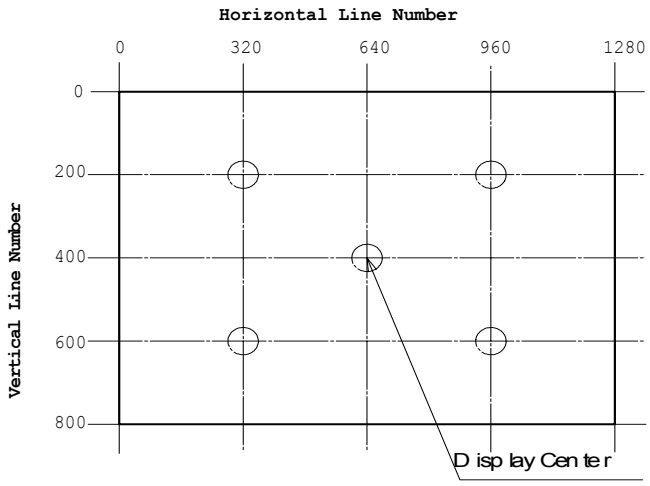

←#

(2) Contrast Ratio:

The contrast ratio can be calculated by the following expression.

Contrast Ratio (*CR*) = L63 / L0

L63 : Luminance on the white raster (gray scale level L63)

L 0 : Luminance on the black raster (gray scale level L0)

(3) Viewing Angle

Viewing angle is defined as the angles(θ, ϕ), in which specified contrast ratio can be obtained.

(Refer to 11.1(3) for the axes.)

(4) Luminance Uniformity:

The Luminance should be measured at center 5 positions and all 13 positions on white raster (gray scale level L63). ←

Uniformity can be calculated by the following expression.

$$\text{Luminance Uniformity} = \frac{\text{Maximum Luminance - Minimum Luminance}}{\text{Maximum Luminance}} \times 100\%$$

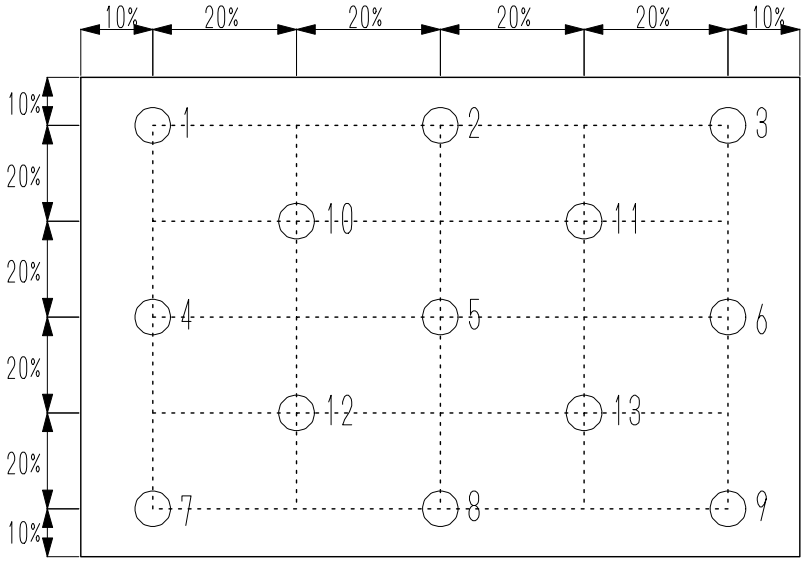

←

(5) Chromaticity :

The values(x,y) of chromaticity coordinates should be measured for the White, Red, Green and Blue Raster(gray scale level L63) each with a photometer.

(6) Response Time :

The response time (t_{ON} + t_{OFF}) is measured with a photo detector (photodiode) which measures the light intensity of the pixels.

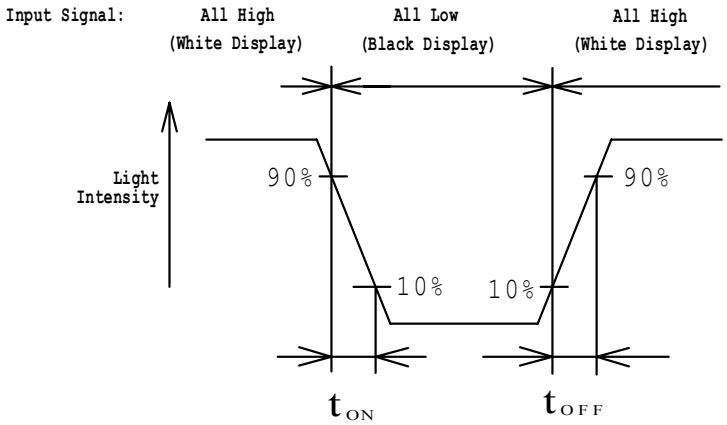

t_{ON} : Turn on time is the time for a photo detector output waveform to go from 90% value to 10% of its maximum.

t_{OFF} : Turn off time is the time for a photo detector output waveform to go from 10% to 90% of its maximum.

Photodiode : S1223-01 HAMAMATSU PHOTONICS K.K.

White Display : White Raster (gray scale level L63)

Black Display : Black Raster (gray scale level L0)

12. EDID ←#

This is the EDID data format to support displays as defined in Dell PN: Y6140

Header

Byte (dec)	Byte (hex)	Field Name and Comments	Value (hex)	Value (binary)
0	00	Header	00	00000000
1	01	Header	FF	11111111
2	02	Header	FF	11111111
3	03	Header	FF	11111111
4	04	Header	FF	11111111
5	05	Header	FF	11111111
6	06	Header	FF	11111111
7	07	Header	00	00000000

Vendor / Product ID / EDID Version

Byte (dec)	Byte (hex)	Field Name and Comments	Value (hex)	Value (binary)	
8	08	EISA manufacture code = 3 Character ID	30	00110000	
9	09	EISA manufacture code (Compressed ASCII)	64	01100100	
10	0A	Panel Supplier Reserved – Product Code	06	00000100	←
11	0B	Panel Supplier Reserved – Product Code	23	00100011	←
12	0C	LCD module Serial No - Preferred but Optional (“0” if not used)		value	
13	0D	LCD module Serial No - Preferred but Optional (“0” if not used)		value	
14	0E	LCD module Serial No - Preferred but Optional (“0” if not used)		value	
15	0F	LCD module Serial No - Preferred but Optional (“0” if not used)		value	
16	10	Week of manufacture		value	
17	11	Year of manufacture		value	
18	12	EDID structure version # = 1	01	00000001	
19	13	EDID revision # = 3	03	00000010	

Display Parameters

Byte (dec)	Byte (hex)	Field Name and Comments	Value (hex)	Value (binary)	
20	14	Video I/P definition = Digital I/P (80h)	80	10000000	
21	15	Max H image size = (Rounded to cm)	1D	00011101	←
22	16	Max V image size = (Rounded to cm)	12	00010010	←
23	17	Display gamma = (gamma×100)-100 = Example: (2.2×100) – 100 = 120	78	01111000	
24	18	Feature support (no DPMS, Active off, RGB, timing BLK 1)	0A	00001010	

Panel Color Coordinates

Byte (dec)	Byte (hex)	Field Name and Comments	Value (hex)	Value (binary)	
25	19	Red/Green Low bit (RxRy/GxGy)	87	10000111	
26	1A	Blue/White Low bit (BxBy/WxWy)	F5	11110101	←
27	1B	Red X Rx = 0.580	94	10010100	←
28	1C	Red Y Ry = 0.340	57	01010111	
29	1D	Green X Gx = 0.310	4F	01001111	
30	1E	Green Y Gy = 0.550	8C	10001100	
31	1F	Blue X Bx = 0.155	27	00100111	←
32	20	Blue Y By = 0.155	27	00100111	←
33	21	White X Wx = 0.313	50	01010000	
34	22	White Y Wy = 0.329	54	01010100	

Established Timings

Byte (dec)	Byte (hex)	Field Name and Comments	Value (hex)	Value (binary)
35	23	Established timings 1 (00h if not used)	00	00000000
36	24	Established timings 2 (00h if not used)	00	00000000
37	25	Manufacturer's timings (00h if not used)	00	00000000

Standard Timing ID

Byte (dec)	Byte (hex)	Field Name and Comments	Value (hex)	Value (binary)
38	26	Standard timing ID1 (01h if not used)	01	00000001
39	27	Standard timing ID1 (01h if not used)	01	00000001
40	28	Standard timing ID2 (01h if not used)	01	00000001
41	29	Standard timing ID2 (01h if not used)	01	00000001
42	2A	Standard timing ID3 (01h if not used)	01	00000001
43	2B	Standard timing ID3 (01h if not used)	01	00000001
44	2C	Standard timing ID4 (01h if not used)	01	00000001
45	2D	Standard timing ID4 (01h if not used)	01	00000001
46	2E	Standard timing ID5 (01h if not used)	01	00000001
47	2F	Standard timing ID5 (01h if not used)	01	00000001
48	30	Standard timing ID6 (01h if not used)	01	00000001
49	31	Standard timing ID6 (01h if not used)	01	00000001
50	32	Standard timing ID7 (01h if not used)	01	00000001
51	33	Standard timing ID7 (01h if not used)	01	00000001
52	34	Standard timing ID8 (01h if not used)	01	00000001
53	35	Standard timing ID8 (01h if not used)	01	00000001

Timing Descriptor #1

Byte (dec)	Byte (hex)	Field Name and Comments	Value (hex)	Value (binary)
54	36	Pixel Clock/10,000 (LSB)	2A	00101010
55	37	Pixel Clock/10,000 (MSB)	1C	00011100
56	38	Horizontal Active = 1280 pixels (lower 8 bits)	00	00000000
57	39	Horizontal Blanking (Thbp) = 168 pixels (lower 8 bits)	A8	10101000
58	3A	Horizontal Active/Horizontal blanking (Thbp) (upper4:4 bits)	50	01010000
59	3B	Vertical Active = 800 lines	20	00100000
60	3C	Vertical Blanking (Tvbp) = 30 lines (DE Blanking typ. for DE only panels)	1E	00011110
61	3D	Vertical Active : Vertical Blanking (Tvbp) (upper4:4 bits)	30	00110000
62	3E	Horizontal Sync, Offset (Thfp) = 16 pixels	10	00010000
63	3F	Horizontal Sync, Pulse Width = 48 pixels	30	00110000
64	40	Vertical Sync, Offset (Tvfp) = 2 lines Sync Width = 2 lines	22	00100010
65	41	Horizontal Vertical Sync Offset/Width upper 2 bits	00	00000000
66	42	Horizontal Image Size =287 mm	1F	00011111
67	43	Vertical image Size = 180 mm	B4	10100100
68	44	Horizontal Image Size / Vertical image size	10	00010000
69	45	Horizontal Border = 0 (Zero for Notebook LCD)	00	00000000
70	46	Vertical Border = 0 (Zero for Notebook LCD)	00	00000000
71	47	Non-interlaced, Normal, no stereo, Separate sync, H/V pol Negatives, **DE only note: LSB is set to "1" if panel is DE-timing only. H/V can be ignored.**	18	00011000

Timing Descriptor #2 Alternative Panel Timing

Byte (dec)	Byte (hex)	Field Name and Comments	Value (hex)	Value (binary)
72	48	Pixel Clock/10,000 (LSB)	00	00000000
73	49	Pixel Clock/10,000 (MSB)	00	00000000
74	4A	Horizontal Active = 1280 pixels (lower 8 bits)	00	00000000
75	4B	Horizontal Blanking (Thbp) = 400 pixels (lower 8 bits)	00	00000000
76	4C	Horizontal Active/Horizontal blanking (Thbp) (upper4:4 bits)	00	00000000
77	4D	Vertical Active = 800 lines	00	00000000
78	4E	Vertical Blanking (Tvbp) = 31 lines (DE Blanking typ. for DE only panels)	00	00000000
79	4F	Vertical Active : Vertical Blanking (Tvbp) (upper4:4 bits)	00	00000000
80	50	Horizontal Sync, Offset (Thfp) = 72 pixels	00	00000000
81	51	Horizontal Sync, Pulse Width = 128 pixels	00	00000000
82	52	Vertical Sync, Offset (Tvfp) = 3 lines Sync Width = 6 lines	00	00000000
83	53	Horizontal Vertical Sync Offset/Width upper 2 bits	00	00000000
84	54	Horizontal Image Size =287 mm	00	00000000
85	55	Vertical image Size = 180 mm	00	00000000
86	56	Horizontal Image Size / Vertical image size	00	00000000
87	57	Horizontal Border = 0 (Zero for Notebook LCD)	00	00000000
88	58	Vertical Border = 0 (Zero for Notebook LCD)	00	00000000
89	59	Module "A" Revision = 00 Example: 00, 01, 02, 03, etc.	00	00000000

Timing Descriptor #3 – Dell specific information

Byte (dec)	Byte (hex)	Field Name and Comments	Value (hex)	Value (binary)	
90	5A	Flag	00	00000000	
91	5B	Flag	00	00000000	
92	5C	Flag	00	00000000	
93	5D	Dummy Descriptor	FE	11111110	
94	5E	Flag	00	00000000	
95	5F	Dell P/N 1st Character : R	52	01010010	
96	60	Dell P/N 2nd Character : P	50	01010000	
97	61	Dell P/N 3rd Character : 7	37	00110111	
98	62	Dell P/N 4th Character : 7	37	00110111	
99	63	Dell P/N 5th Character : 4	34	00110100	
100	64	LCD Supplier EEDID Revision #	A3	10100011	←
101	65	Manufacturer P/N : 1	31	00110001	
102	66	Manufacturer P/N : 3	33	00110011	
103	67	Manufacturer P/N : 3	33	00110011	
104	68	Manufacturer P/N : E	45	01000101	
105	69	Manufacturer P/N : W	57	01010111	
106	6A	Manufacturer P/N : D	44	01000100	
107	6B	Manufacturer P/N (If <13 char, then terminate with ASCII code 0Ah, set remaining char = 20h)	44	01000100	

Timing Descriptor #4

Byte (dec)	Byte (hex)	Field Name and Comments	Value (hex)	Value (binary)	
108	6C	Flag	00	00000000	
109	6D	Flag	00	00000000	
110	6E	Flag	00	00000000	
111	6F	Data Type Tag:	FE	11111110	
112	70	Flag	00	00000000	
113	71	SMBUS Value = 10 nits	08	00001000	←
114	72	SMBUS Value = 17 nits	0C	00001100	←
115	73	SMBUS Value = 24 nits	10	00010000	←
116	74	SMBUS Value = 30 nits	14	00010100	←
117	75	SMBUS Value = 60 nits	28	00101000	←
118	76	SMBUS Value = 120 nits	50	01010000	←
119	77	SMBUS Value = 190 nits	7F	01011111	←
120	78	SMBUS Value = 300 nits	D8	11011000	←
121	79	Number of LVDS receiver chips = '01' or '02'	01	00000001	
122	7A	BIST Enable: Yes = '01' No = '00'	01	00000001	
123	7B	(If <13 char, then terminate with ASCII code 0Ah, set remaining char = 20h)	0A	00001010	
124	7C	(If <13 char, then terminate with ASCII code 0Ah, set remaining char = 20h)	20	00100000	
125	7D	(If <13 char, then terminate with ASCII code 0Ah, set remaining char = 20h)	20	00100000	

Byte (dec)	Byte (hex)	Field Name and Comments	Value (hex)	Value (binary)
126	7E	Extension flag (# of optional 128 EDID extension blocks to follow, Typ = 0)	00	00000000
127	7F	Checksum (The 1-byte sum of all 128 bytes in this EDID block shall = 0)		value