UNIPAC OPTOELECTRONICS CORPORATION

Spec. No.	233-220-073

Version : 1
Total pages : 18
Date : 1999.12.08

UP018D01 COLOR TFT-LCD
PRELIMINARY SPECIFICATION

MODEL NAME: UP018D01

The content of this technical information is subject to change without notice. Please contact Unipac or its agent for further information.

Unipac copyright 1999
All rights reserved ,
Copying forbidden.

UP018D01 Specification Change List

Version	Change Date	Content
1	1999 -12-08	**B. Electrical specification**

3.a.Typical operating conditions (Page 6/18)

Item	Version 0	Version 1
V_{iA}	AV_{DD}-0.8 (Max.)	AV_{DD}-0.4 (Max.)
V_{iDC}	2.3 (typ.)	AV_{DD} /2 (typ.)
V_{IH}	3.5 (Min.)	$0.8V_{CC}$ (Min.)
V_{IL}	1.5 (Max.)	0.2 V_{CC} (Max.)

3.c.Backlight driving conditions (Page 6/18)

Item	Version 0	Version 1
Note 3	-	The lamp frequency should be selected as different as possible from display horizontal synchronous signal to (f_H) avoid interference.(Even the frequency " $\frac{n}{2} f_H$ " should be avoided)
Note 4	-	For starting the backlight unit, the output voltage of DC/AC'S transformer should be larger than the maximum lamp starting voltage.

4. a.Timing conditions (Page 7/18)

Item	Version 0	Version 1
Note 2	Please don't use odd horizontal lines to drive LCD panel for both odd and even field simultaneously.	-

Contents:

A. Physical specification **P3**

B. Electrical specifications **P4**

1. Pin assignment **P4**

a. TFT-LCD panel driving section **P4**

b. Backlight driving section **P5**

2. Absolute maximum ratings **P5**

3. Electrical characteristics **P6**

a. Typical operating conditions **P6**

b. Current consumption **P6**

c. Backlight driving conditions **P6**

4. AC Timing **P7**

a. Timing conditions **P7**

b. Timing diagram **P7**

C. Optical specifications **P8**

D. Reliability test items **P9**

E. Packing form **P10**

ALL RIGHTS STRICTLY RESERVED. ANY PORTION OF THIS PRPER SHALL NOT BE REPRODUCED, COPIED, OR TRANSFORMED TO ANY OTHER FORMS WITHOUT PERMISSION FROM UNIPAC OPTOELECTRONICS CORP.

Appendix:

Fig.1 Outline dimension of TFT-LCD module **P11**
Fig.2 Sampling clock timing **P12**
Fig.3 Horizontal display timing range(Normal scanning mode) **P13**
Fig.4-(a) Horizontal timing **P14**
Fig.4-(b) Detail horizontal timing **P15**
Fig.5 Vertical shift clock timing **P16**
Fig.6-(a) Vertical timing (Normal scanning mode) **P17**
Fig.6-(b) Vertical timing (Reverse scanning mode) **P18**

ALL RIGHTS STRICTLY RESERVED. ANY PORTION OF THIS PRPER SHALL NOT BE REPRODUCED, COPIED, OR TRANSFORMED TO ANY OTHER FORMS WITHOUT PERMISSION FROM UNIPAC OPTOELECTRONICS CORP.

A. Physical specifications

NO.	Item	Specification	Remark
1	Display resolution(dot)	280(W)× 220(H)	
2	Active area(mm)	35.6(W)× 26.6(H)	
3	Screen size(inch)	1.75(Diagonal)	
4	Dot pitch(mm)	0.127(W)× 0.121(H)	
5	Color configuration	R. G. B. delta	
6	Overall dimension(mm)	48.6(W)× 39.6(H)× 6.1(D)	Note 1
7	Weight(g)	22± 5	
8	Surface treatment	Anti-glare (Haze = 6% typical)	

Note 1: Refer to Fig. 1

ALL RIGHTS STRICTLY RESERVED. ANY PORTION OF THIS PRPER SHALL NOT BE REPRODUCED, COPIED, OR TRANSFORMED TO ANY OTHER FORMS WITHOUT PERMISSION FROM UNIPAC OPTOELECTRONICS CORP.

B. Electrical specifications

1.Pin assignment

a. TFT-LCD panel driving section

Pin no	Symbol	I/O	Description	Remark
1	GND	-	Ground for logic circuit	
2	V_{CC}	I	Supply voltage for logic control circuit	
3	V_{GL}	I	Negative power for scan driver	
4	V_{GH}	I	Positive power for scan driver	
5	STVR	I/o	Vertical start pulse	Note 1
6	STVL	I/o	Vertical start pulse	Note 1
7	CKV	I	Shift clock input for scan driver	
8	U/D	I	UP/DOWN scan control input	Note 1,2
9	OEV	I	Output enable input for scan driver	
10	VCOM	I	Common electrode driving signal	
11	VCOM	I	Common electrode driving signal	
12	L/R	I	LEFT/RIGHT scan control input	Note 1,2
13	Q1H	I	Analog signal rotate input	
14	OEH	I	Output enable input for data driver	
15	STHL	I/o	Start pulse for horizontal scan line	Note 1
16	STHR	I/o	Start pulse for horizontal scan line	Note 1
17	CPH3	I	Sampling and shifting clock pulse for data driver	
18	CPH2	I	Sampling and shifting clock pulse for data driver	
19	CPH1	I	Sampling and shifting clock pulse for data driver	
20	V_{CC}	I	Supply voltage of logic control circuit for data driver	
21	GND	-	Ground for logic circuit	
22	VR	I	Alternated video signal input(Red)	
23	VG	I	Alternated video signal input(Green)	
24	VB	I	Alternated video signal input(Blue)	
25	AV_{DD}	I	Supply voltage for analog circuit	
26	AV_{SS}	-	Ground for analog circuit	

Note 1: Selection of scanning mode

Mode	Setting of scan control input		IN/OUT state For start pulse				Scanning direction
	U/D	L/R	STVR	STVL	STHR	STHL	
Normal mode	GND	V_{CC}	OUT	IN	OUT	IN	From up to down, and from left to right.
Reverse mode	V_{CC}	GND	IN	OUT	IN	OUT	From down to up, and from right to left.

IN: Input; OUT: Output.

ALL RIGHTS STRICTLY RESERVED. ANY PORTION OF THIS PRPER SHALL NOT BE REPRODUCED, COPIED, OR

Note 2 : Definition of scanning direction.
Refer to figure as below:

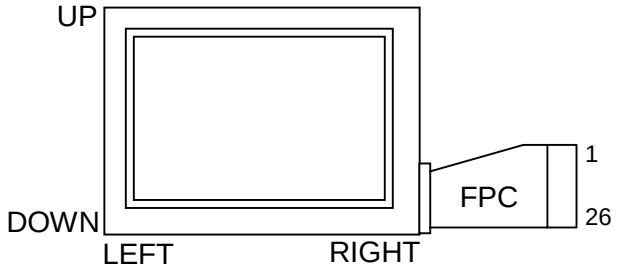

b. Backlight driving section (Refer to Fig.1)

No.	Symbol	I/O	Description	Remark
1	HI	I	Power supply for backlight unit (Hight voltage)	
2	GND	-	Ground	

2. Absolute maximum ratings

Item	Symbol	Condition	Min.	Max.	Unit	Remark
Power voltage	V_{CC}	GND=0	-0.3	7	V	
	AV_{DD}	AV_{SS}=0	-0.3	7	V	
	V_{GH}	GND=0	-0.3	21	V	
	V_{GL}		-15	0.3	V	
	$V_{GH}-V_{GL}$		-	31	V	
Input signal voltage	V_i		-0.2	V_{CC}+0.2	V	Note 1
	V_I		-0.3	V_{CC}+0.3	V	Note 2
	VCOM		-2.9	5.2	V	
Operating temperature	Topa		0	60	℃	Ambient temperature
Storage temperature	Tstg		-25	80	℃	Ambient temperature

Note 1: VR, VG, VB.
Note 2: STHL, STHR, Q1H, OEH, L/R, CPH1~CPH3, STVR, STVL, OEV, CKV, U/D.

ALL RIGHTS STRICTLY RESERVED. ANY PORTION OF THIS PRPER SHALL NOT BE REPRODUCED, COPIED, OR TRANSFORMED TO ANY OTHER FORMS WITHOUT PERMISSION FROM UNIPAC OPTOELECTRONICS CORP.

3. Electrical characteristics

a. Typical operating conditions (GND=AVss=0V)

Item		Symbol	Min.	Typ.	Max.	Unit	Remark
Power supply		V_{CC}	4.8	5	5.2	V	
		AV_{DD}	4.8	5	5.2	V	
		V_{GH}	14.3	15	15.7	V	
		V_{GLAC}	-	6	-	Vp-p	AC component of $V_{GL.}$ Note 1
		V_{GLDC}	-10.5	-10	-9.5	V	DC component of $V_{GL.}$
Video signal Amplitude (VR,VG,VB)		V_{Ia}	AV_{SS} +0.4	-	AV_{DD}-0.4	V	Note 2
		V_{iAC}	-	3	3.8	V	AC component
		V_{iDC}	-	AV_{DD} /2	-	V	DC component
VCOM		V_{CAC}	-	6	-	Vp-p	AC component,Note 3
		V_{CDC}	1.06	1.16	1.26	V	DC component
Input Signal voltage	H Level	V_{IH}	$0.8V_{CC}$	-	V_{CC}	V	Note 4
	L Level	V_{IL}	0	-	$0.2V_{CC}$	V	

Note 1: The same phase and amplitude with common electrode driving signal (VCOM).
Note 2: Refer to Fig.4 - (a).
Note 3: The brightness of LCD panel could be adjusted by the adjustment of the AC component of VCOM.
Note 4: STHL, STHR, Q1H, OEH, L/R, CPH1~CPH3, STVR, STVL, OEV, CKV, U/D.

b. Current consumption (GND=AVss=0V)

Parameter	Symbol	Condition	Min.	Typ.	Max.	Unit	Remark
Current for driver	I_{GH}	V_{GH}=15V	-	1.6	4	mA	
	I_{GL}	V_{GL}=-10V	-	-1.6	-4	mA	
	I_{CC}	V_{CC}=5V	-	0.8	2	mA	
	I_{DD}	AV_{DD}=5V	-	2.5	8	mA	

c. Backlight driving conditions

Parameter	Symbol	Min.	Typ.	Max.	Unit	Remark
Lamp voltage	V_L	170	190	210	Vrms	
Lamp current	I_L	1.5	2	2.5	mArms	
Frequency	F_L	55	60	65	KH_Z	Note 3
Lamp starting voltage	V_S	-	-	375	Vrms	Note 1,4
		-	-	560	Vrms	Note 2,4

Note 1 : Ta = 25℃.
Note 2 : Ta = 0℃.
Note 3 : The lamp frequency should be selected as different as possible from display horizontal synchronous signal (f_H) to avoid interference.(Even the frequency "$\frac{n}{2} f_H$ " should be avoided)
Note 4 : For starting the backlight unit, the output voltage of DC/AC'S transformer should be larger than the maximum lamp starting voltage.

ALL RIGHTS STRICTLY RESERVED. ANY PORTION OF THIS PRPER SHALL NOT BE REPRODUCED, COPIED, OR TRANSFORMED TO ANY OTHER FORMS WITHOUT PERMISSION FROM UNIPAC OPTOELECTRONICS CORP.

4. AC Timing

a. Timing conditions

Parameter	Symbol	Min.	Typ.	Max.	Unit.	Remark
Rising time	t_r	-	-	10	ns	Note 1
Falling time	t_f	-	-	10	ns	Note 1
High and low level pulse width	t_{CPH}	450	500	550	ns	CPH1~CPH3
CPH pulse duty	t_{CWH}	40	50	60	%	CPH1~CPH3
CPH pulse delay	t_{C12} t_{C23} t_{C31}	70	$t_{CPH}/3$	$t_{CPH}/2$	ns	CPH1~CPH3
STH setup time	t_{SUH}	70	-	-	ns	STHR,STHL
STH hold time	t_{HDH}	400	-	-	ns	STHR,STHL
STH pulse width	t_{STH}	-	1	-	t_{CPH}	STHR,STHL
STH period	t_H	61.5	63.5	65.5	μs	STHR,STHL
OEH pulse width	t_{OEH}	-	3	-	t_{CPH}	OEH
Sample and hold disable time	t_{DIS1}	-	20	-	t_{CPH}	
OEV pulse width	t_{OEV}	-	5	-	t_{CPH}	OEV
CKV pulse width	t_{CKV}	2	6	10	t_{CPH}	CKV
Clean enable time	t_{DIS2}	-	4	-	t_{CPH}	
Horizontal display start	t_{SH}	-	4	-	$t_{CPH}/3$	
Horizontal display timing range	t_{DH}	-	280	-	$t_{CPH}/3$	
STV setup time	t_{SUV}	400	-	-	ns	STVL,STVR
STV hold time	t_{HDV}	400	-	-	ns	STVL,STVR
STV pulse width	t_{STV}	-	-	1	t_H	STVL,STVR
Horizontal lines per field	t_V	256	262	268	t_H	
Vertical display start	t_{SV}		10	-	t_H	
Vertical display timing range	t_{DV}		220	-	t_H	
VCOM rising time	t_{rCOM}		-	3	μs	
VCOM falling time	t_{fCOM}		-	3	μs	
VCOM delay time	t_{DCOM}		-	3	μs	
RGB delay time	t_{DRGB}		-	2	μs	

Note 1: For all of the logic signals.

b. Timing diagram

Please refer to the attached drawing, from Fig.2 to Fig.6.

ALL RIGHTS STRICTLY RESERVED. ANY PORTION OF THIS PRPER SHALL NOT BE REPRODUCED, COPIED, OR TRANSFORMED TO ANY OTHER FORMS WITHOUT PERMISSION FROM UNIPAC OPTOELECTRONICS CORP.

C. Optical specification (Note 1,Note 2, Note 3)

Item	Symbol	Condition	Min.	Typ.	Max.	Unit	Remark
Response time Rise Fall	 Tr Tf	 θ =0°	 - -	 25 30	 50 60	 ms ms	Note 4
Contrast ratio	CR	At optimized viewing angle	60	100	-		Note 5,6
Viewing angle Top Bottom Left Right		CR≧10	 10 30 45 45	 - - - -	 - - - -	 deg.	Note 7
Brightness	Y_L	θ =0°	110	140	-	nit	Note 8
White chromaticity	X	θ =0°	0.25	0.3	0.35		
	y	θ =0°	0.3	0.35	0.40		
Color temperature	K_L	θ =0°		6400		K	

Note 1. Ambient temperature =25℃. And lamp current I_L=2mArms.

Note 2. To be measured in the dark room.

Note 3.To be measured on the center area of panel with a viewing cone of 1° by Topcon luminance meter BM-7, after 10 minutes operation.

Note 4. Definition of response time:

The output signals of photodetector are measured when the input signals are changed from “black” to “white”(falling time)and from “white” to “black”(rising time),respectively. The response time is defined as the time interval between the 10% and 90% of amplitudes. Refer to figure as below.

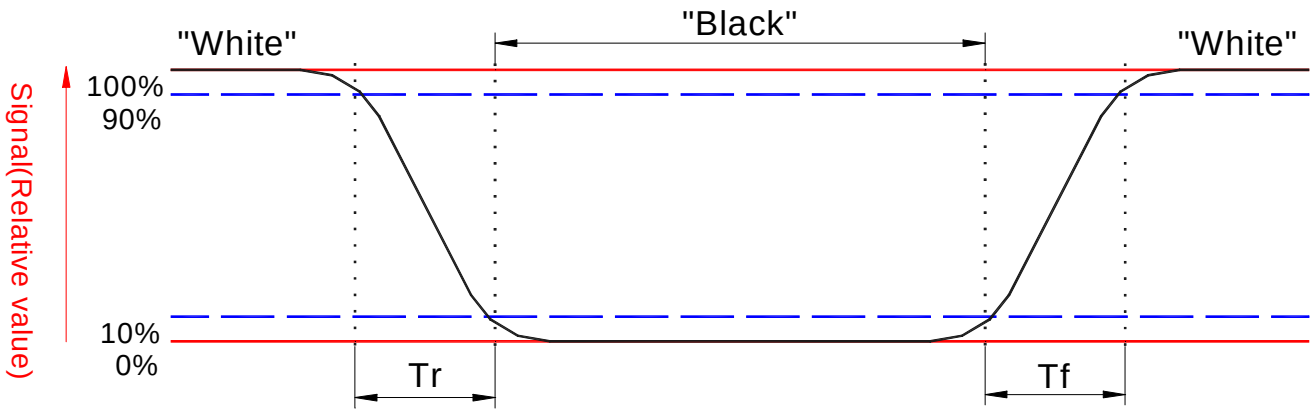

Note 5. Definition of contrast ratio:

Contrast ratio is calculated with the following formula.

$$\text{Contrast ratio (CR)} = \frac{\text{Photodetector output when LCD is at “White” state}}{\text{Photodetector output when LCD is at “Black” state}}$$

ALL RIGHTS STRICTLY RESERVED. ANY PORTION OF THIS PRPER SHALL NOT BE REPRODUCED, COPIED, OR TRANSFORMED TO ANY OTHER FORMS WITHOUT PERMISSION FROM UNIPAC OPTOELECTRONICS CORP.

Note 6. White $Vi=V_{i50} \mp 1.5V$
Black $Vi=V_{i50} \pm 2.0V$
"± " means that the analog input signal swings in phase with COM signal.
"∓" means that the analog input signal swings out of phase with COM signal.
V_{i50} : The analog input voltage when transmission is 50%
The 100% transmission is defined as the transmission of LCD panel when all the input terminals of module are electrically opened.

Note 7. Definition of viewing angle:
Refer to figure as below.

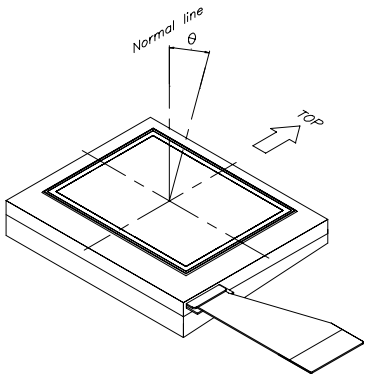

Note 8. Measured at the center area of the panel when all the input terminals of LCD panel are electrically opened.

D. Reliability test items:

No.	Test items	Conditions	Remark
1	High temperature storage	Ta= 80℃ 240H	
2	Low temperature storage	Ta= -25℃ 240H	
3	High temperature operation	Ta= 60℃ 240H	
4	Low temperature operation	Ta= 0℃ 240H	
5	High temperature and high humidity	Ta= 60℃. 95% RH 240H	Operation
6	Heat shock	-25℃~80℃/50 cycle 2H/cycle	Non-operation
7	Electrostatic discharge	± 200V,200pF(0Ω), once for each terminal	Non-operation
8	Vibration	Frequency range : 10~55Hz Stoke : 1.5mm Sweep : 10~55Hz~10Hz 2 hours for each direction of X,Y,Z (6 hours for total)	Non-operation JIS C7021, A-10 condition A
9	Mechanical shock	100G . 6ms, ± X,± Y,± Z 3 times for each direction	Non-operation JIS C7021, A-7 condition C
10	Vibration (with carton)	Random vibration: $0.015G^2$/Hz from 5~200Hz –6dB/Octave from 200~500Hz	IEC 68-34
11	Drop (with carton)	Height: 60cm 1 corner, 3 edges, 6 surfaces	

Note: Ta: Ambient temperature.

ALL RIGHTS STRICTLY RESERVED. ANY PORTION OF THIS PRPER SHALL NOT BE REPRODUCED, COPIED, OR TRANSFORMED TO ANY OTHER FORMS WITHOUT PERMISSION FROM UNIPAC OPTOELECTRONICS CORP.

E. Packing form

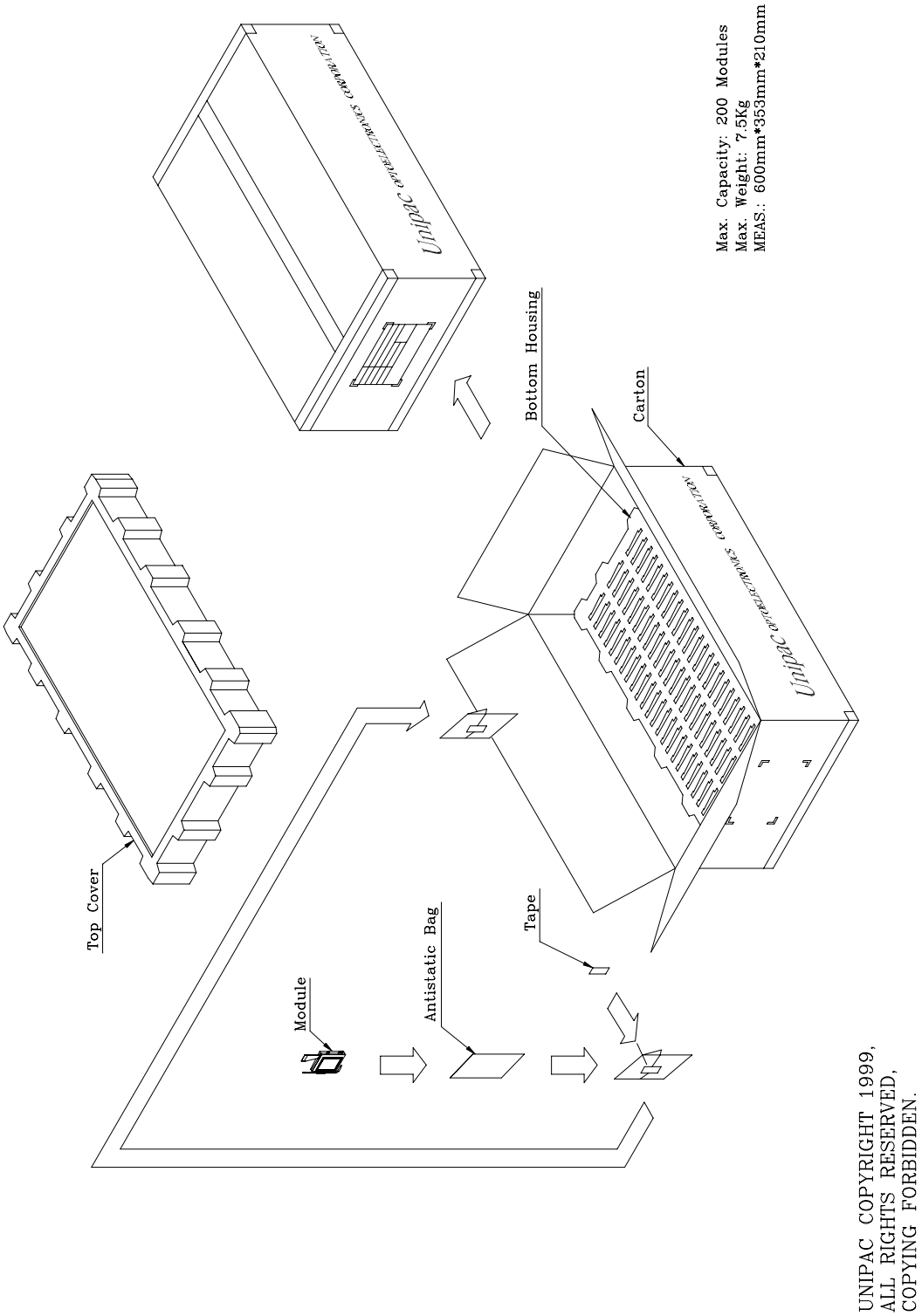

ALL RIGHTS STRICTLY RESERVED. ANY PORTION OF THIS PRPER SHALL NOT BE REPRODUCED, COPIED, OR TRANSFORMED TO ANY OTHER FORMS WITHOUT PERMISSION FROM UNIPAC OPTOELECTRONICS CORP.

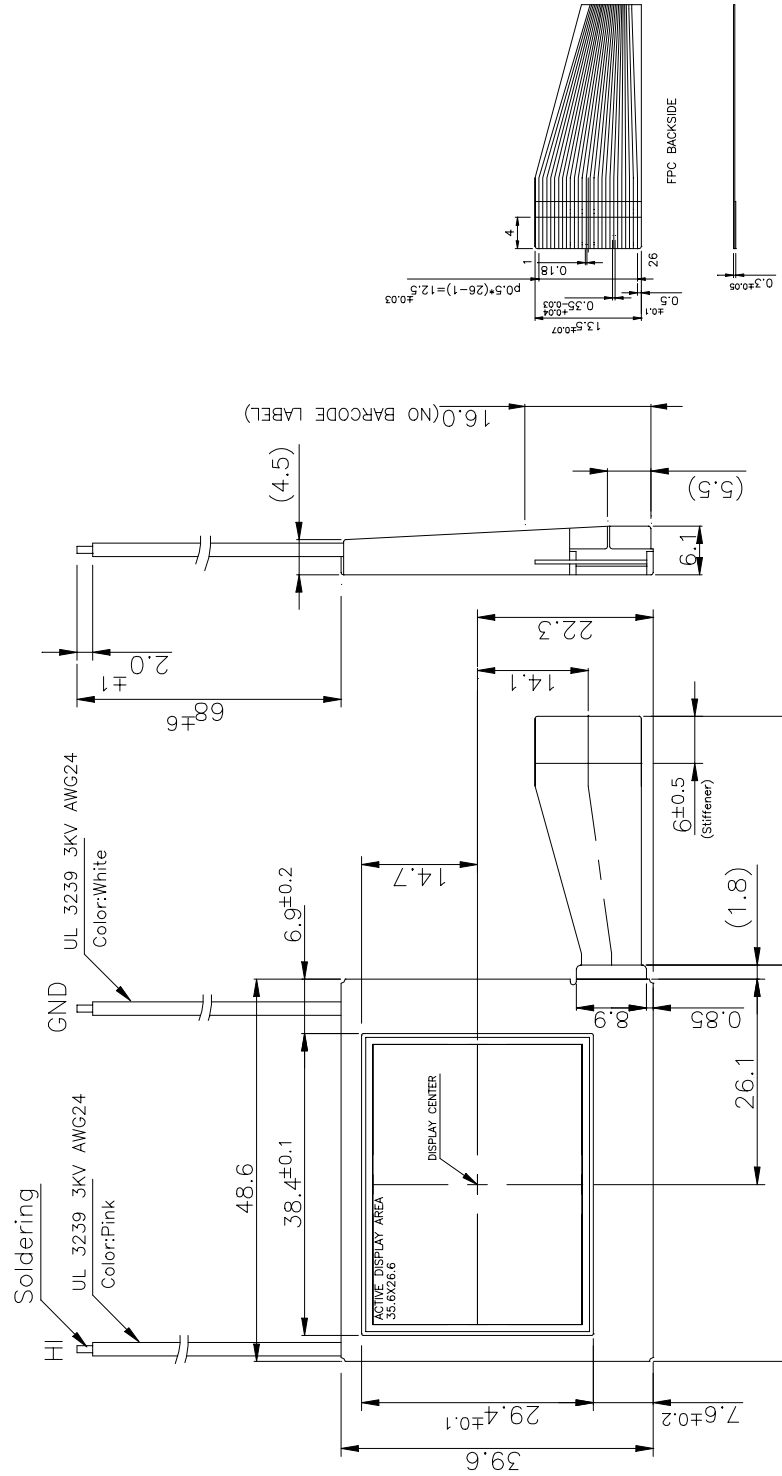

Fig.1 Outline dimension of TFT-LCD module

NOTES:
1.General tolerance is ±0.3.
2.The bending radius of FPC should be larger than 0.6.
3.Unit : mm

UNIPAC COPYRIGHT 1999,
ALL RIGHTS RESERVED,
COPYING FORBIDDEN.

ALL RIGHTS STRICTLY RESERVED. ANY PORTION OF THIS PRPER SHALL NOT BE REPRODUCED, COPIED, OR TRANSFORMED TO ANY OTHER FORMS WITHOUT PERMISSION FROM UNIPAC OPTOELECTRONICS CORP.

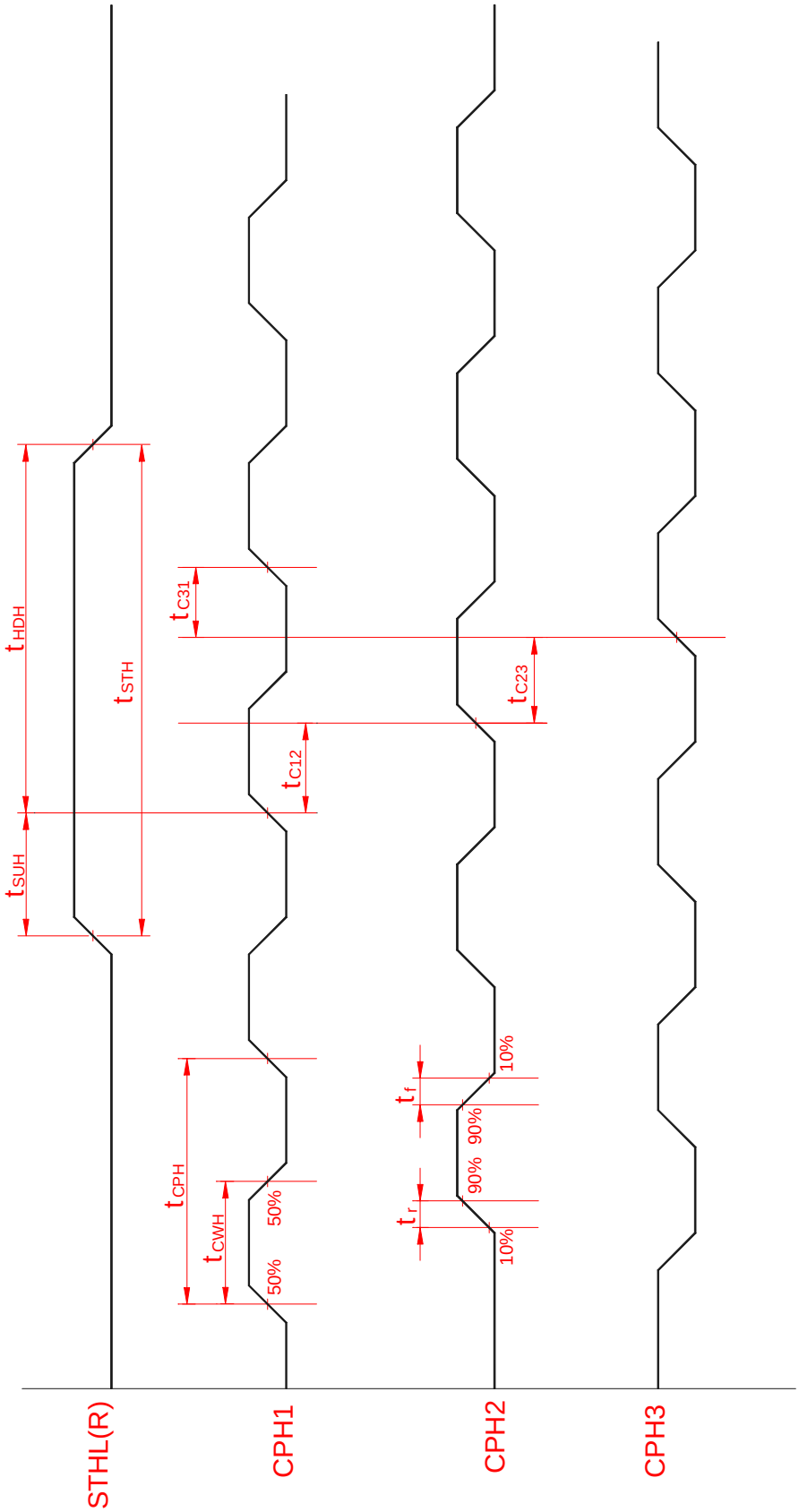

Fig. 2 Sampling clock timing

ALL RIGHTS STRICTLY RESERVED. ANY PORTION OF THIS PRPER SHALL NOT BE REPRODUCED, COPIED, OR TRANSFORMED TO ANY OTHER FORMS WITHOUT PERMISSION FROM UNIPAC OPTOELECTRONICS CORP.

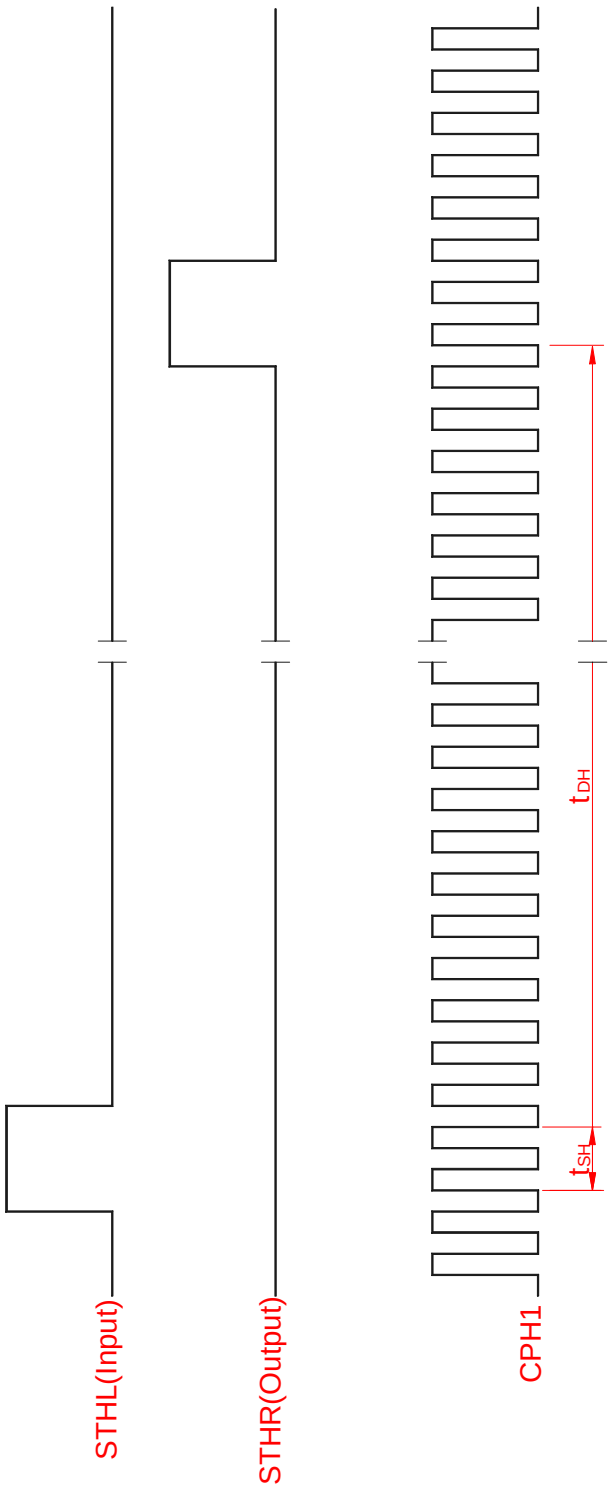

Fig. 3 Horizontal display timing range(Normal scanning mode)

ALL RIGHTS STRICTLY RESERVED. ANY PORTION OF THIS PRPER SHALL NOT BE REPRODUCED, COPIED, OR TRANSFORMED TO ANY OTHER FORMS WITHOUT PERMISSION FROM UNIPAC OPTOELECTRONICS CORP.

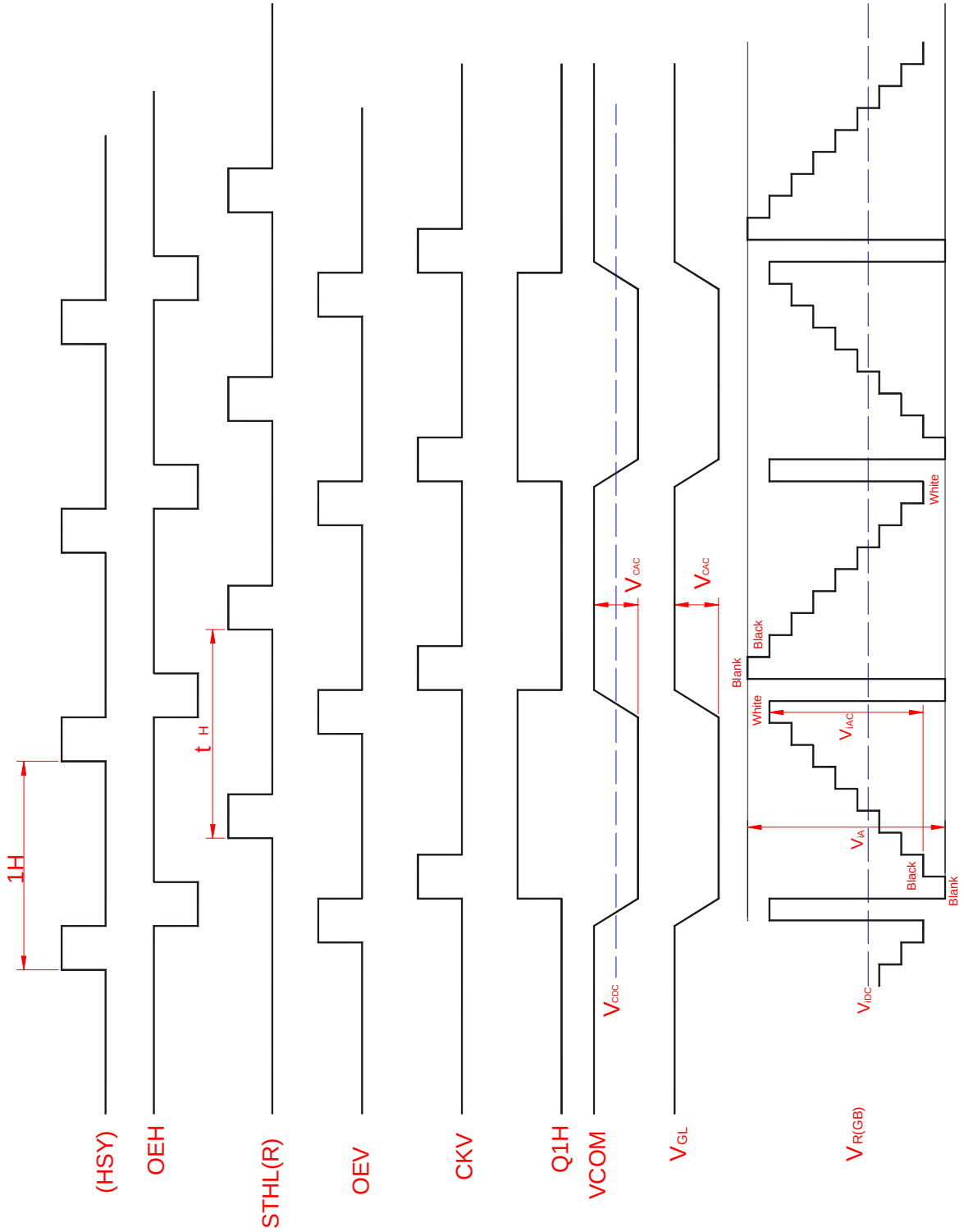

Fig.4-(a) Horizontal timing

ALL RIGHTS STRICTLY RESERVED. ANY PORTION OF THIS PRPER SHALL NOT BE REPRODUCED, COPIED, OR TRANSFORMED TO ANY OTHER FORMS WITHOUT PERMISSION FROM UNIPAC OPTOELECTRONICS CORP.

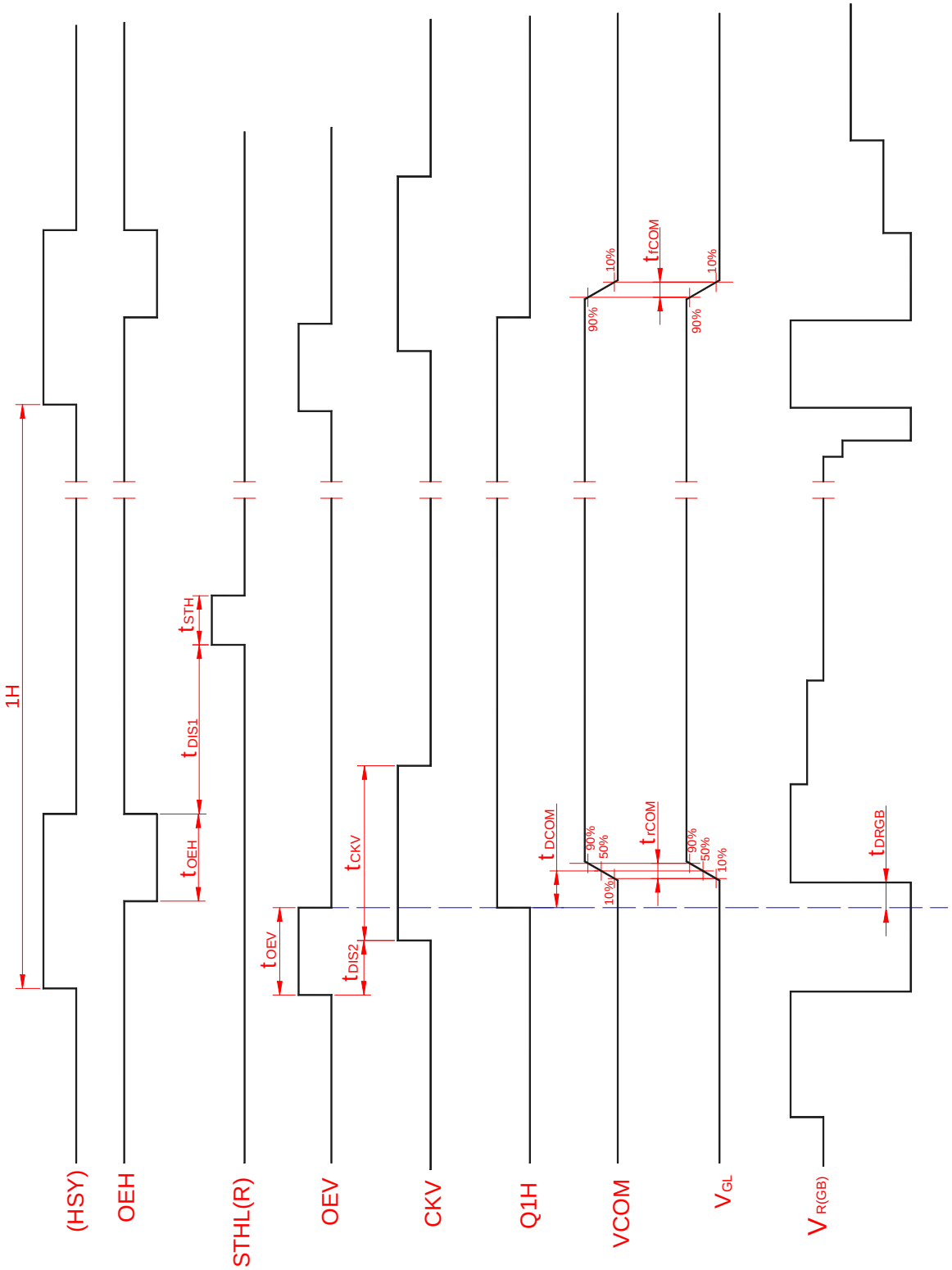

Fig. 4-(b) Detail horizontal timing

ALL RIGHTS STRICTLY RESERVED. ANY PORTION OF THIS PRPER SHALL NOT BE REPRODUCED, COPIED, OR TRANSFORMED TO ANY OTHER FORMS WITHOUT PERMISSION FROM UNIPAC OPTOELECTRONICS CORP.

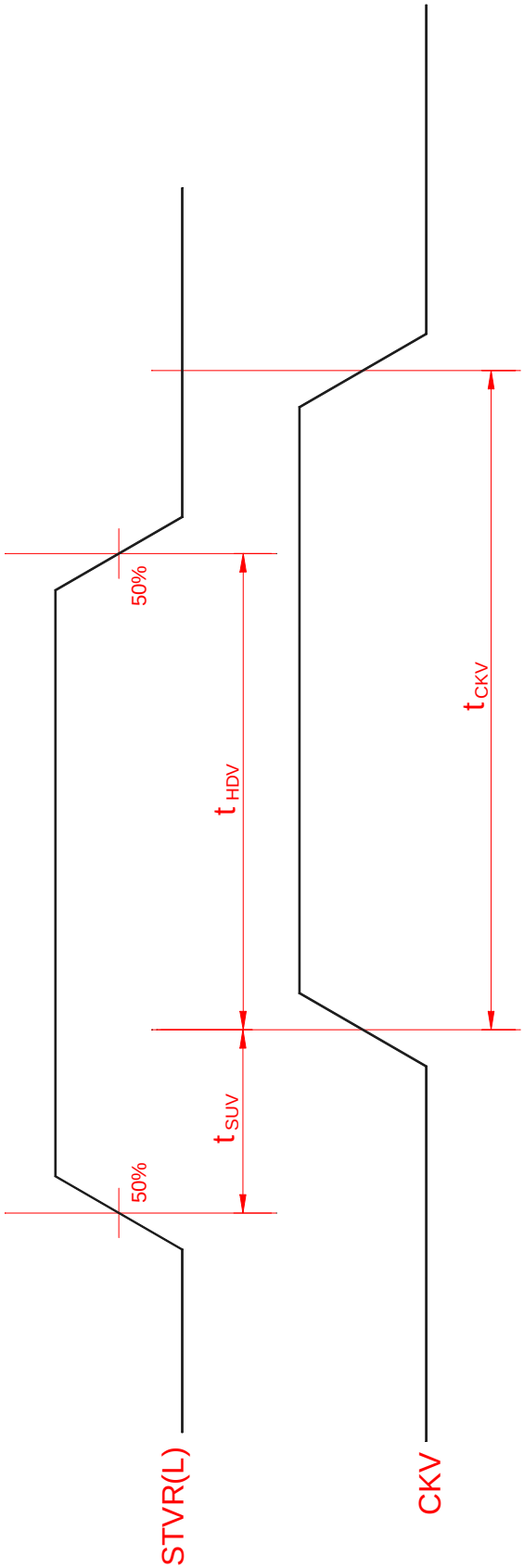

Fig.5 Vertical shift clock timing

ALL RIGHTS STRICTLY RESERVED. ANY PORTION OF THIS PRPER SHALL NOT BE REPRODUCED, COPIED, OR TRANSFORMED TO ANY OTHER FORMS WITHOUT PERMISSION FROM UNIPAC OPTOELECTRONICS CORP.

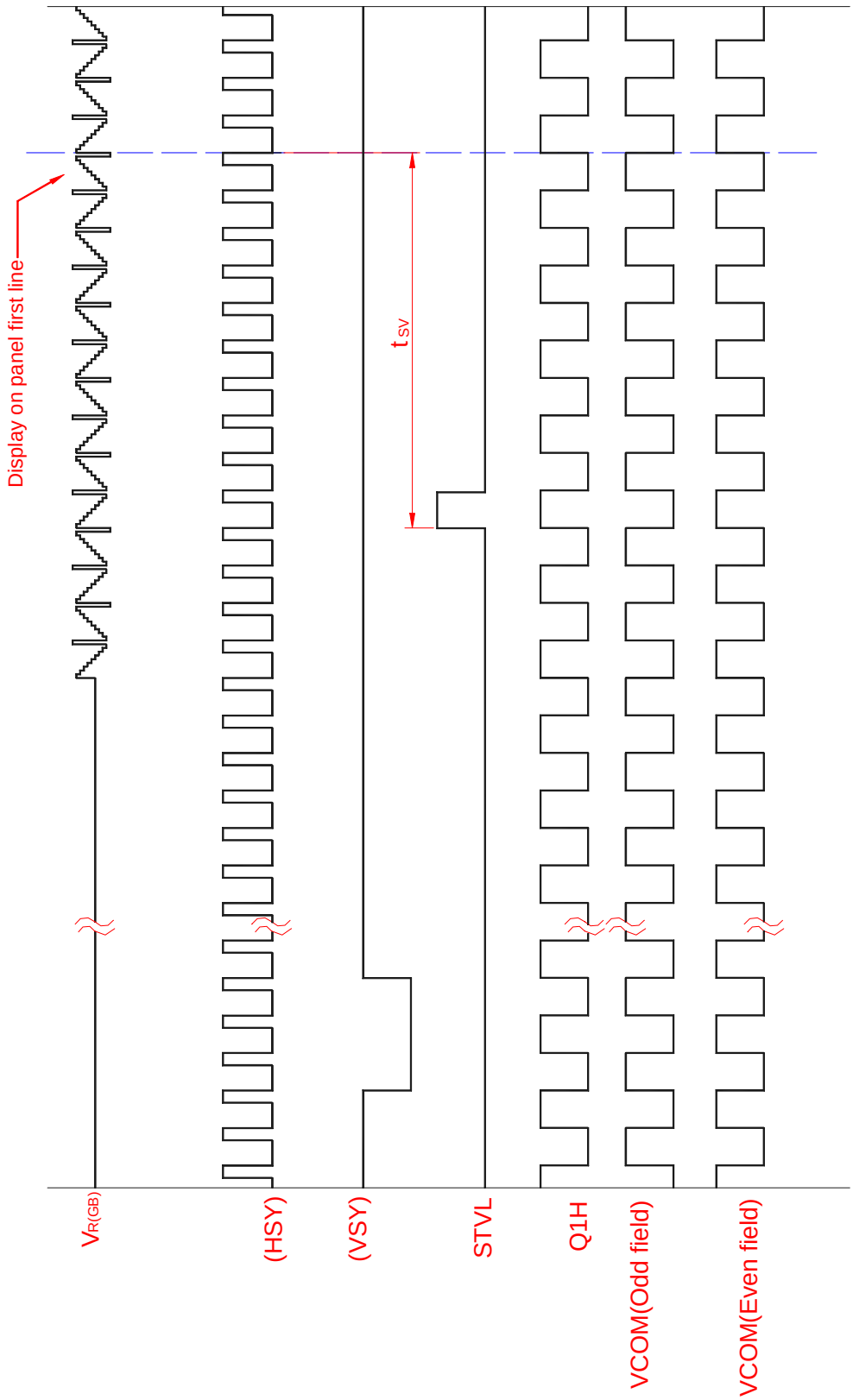

Fig.6-(a) Vertical timing (From up to down)

ALL RIGHTS STRICTLY RESERVED. ANY PORTION OF THIS PRPER SHALL NOT BE REPRODUCED, COPIED, OR TRANSFORMED TO ANY OTHER FORMS WITHOUT PERMISSION FROM UNIPAC OPTOELECTRONICS CORP.

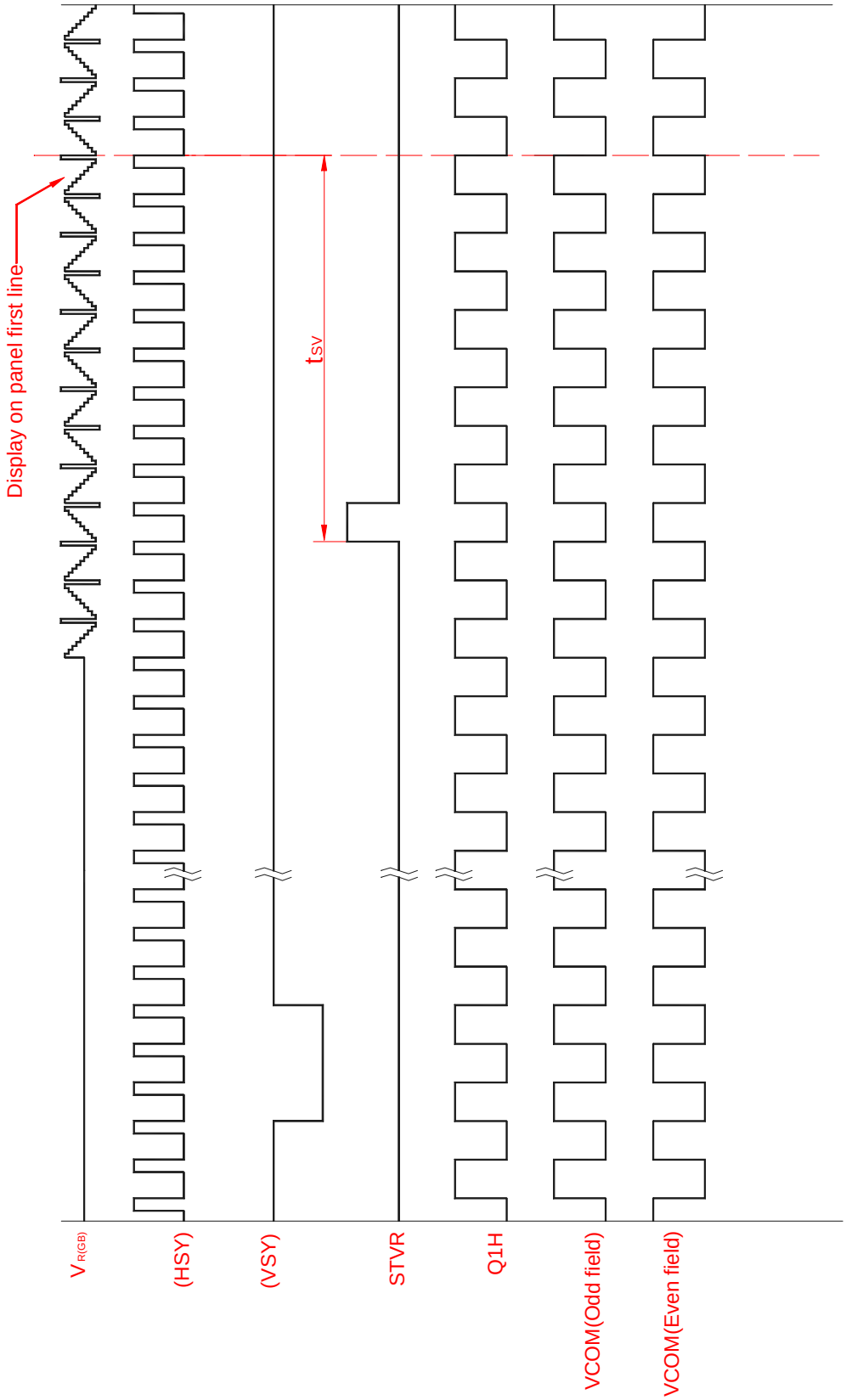

Fig.6-(b) Vertical timing (From down to up)

ALL RIGHTS STRICTLY RESERVED. ANY PORTION OF THIS PRPER SHALL NOT BE REPRODUCED, COPIED, OR TRANSFORMED TO ANY OTHER FORMS WITHOUT PERMISSION FROM UNIPAC OPTOELECTRONICS CORP.