UNIPAC OPTOELECTRONICS CORPORATION

Spec. No.	412-212-004

Version : 3
Total pages: 14
Date : 1998/09/16

UP61V01 COLOR TFT-LCD MODULE SPECIFICATION

MODEL NAME: UP61V01

The content of this technical information is subject to change without notice. Please contact Unipac or its agent for further information.

Approved by	Checked by	Prepared by
F. C. Lu	T. P. Chiang	Wan Chi/Hsu

Unipac copyright 1998
All rights reserved,
copying forbidden.

Contents:

A. Physical specifications **P2**

B. Electrical specifications **P3**

1. Pin assignment **P3**

2. Absolute maximum ratings **P4**

3. Electrical characteristics **P4**

a. Typical operating conditions **P4**

b. Current consumption **P4**

c. Display color v.s. input data signals **P5**

d. Input signal timing **P6**

e. Display position **P7**

f. Backlight driving conditions **P7**

4. Power ON/OFF Sequence **P7**

C. Optical specifications **P8**

D. Reliability test items **P10**

E. Display quality **P10**

F. Packing form **P11**

Appendix:

Fig.1 Outline dimensions of TFT-LCD module **P12**
Fig.2 Vertical timing chart **P13**
Fig.3 Horizontal timing chart **P14**

ALL RIGHTS STRICTLY RESERVED. ANY PORTION OF THIS PAPER SHALL NOT BE REPRODUCED, COPIED, OR TRANSFORMED TO ANY OTHER FORMS WITHOUT PERMISSION FROM UNIPAC OPTOELECTRONICS CORP.

A. Physical specifications

No.	Item	Specification	Remark
1	Display resolution(pixel)	640(H) × 480(V)	
2	Active area(mm)	122.9(H) × 92.2(V)	
3	Screen size(inch)	6.1(Diagonal)	
4	Dot pitch(mm)	0.064(H) × 0.192(V)	
5	Pixel pitch(mm)	0.192(H)× 0.192(V)	
6	Color configuration	R.G.B Vertical stripe	
7	Overall dimensions(mm)	157.8(H) × 108.7(V) × 8(D)	Note 1
8	Weight(g)	180±20	
9	Surface treatment	Anti-Glare coating	

Note 1: Refer to Fig. 1.

ALL RIGHTS STRICTLY RESERVED. ANY PORTION OF THIS PAPER SHALL NOT BE REPRODUCED, COPIED, OR TRANSFORMED TO ANY OTHER FORMS WITHOUT PERMISSION FROM UNIPAC OPTOELECTRONICS CORP.

B. Electrical specifications

1. Pin assignment
   Connector : 25-5087-032-404-861 (ELCO)
   User's connector : 14-5087-032-830-861(ELCO)

Pin no.	Symbol	i/o	Description	Remark
1	GND	-	Ground	Note 1
2	CLK	i	Clock signal for sampling each data signal	
3	Hsync	i	Horizontal sync.	
4	Vsync	i	Vertical sync.	
5	GND	-	Ground	Note 1
6	R0	i	Red data(LSB)	
7	R1	i	Red data	
8	R2	i	Red data	
9	R3	i	Red data	
10	R4	i	Red data	
11	R5	i	Red data(MSB)	
12	GND	-	Ground	Note 1
13	G0	i	Green data(LSB)	
14	G1	i	Green data	
15	G2	i	Green data	
16	G3	i	Green data	
17	G4	i	Green data	
18	G5	i	Green data(MSB)	
19	GND	-	Ground	Note 1
20	B0	i	Blue data(LSB)	
21	B1	i	Blue data	
22	B2	i	Blue data	
23	B3	i	Blue data	
24	B4	i	Blue data	
25	B5	i	Blue data(MSB)	
26	GND	-	Ground	Note 1
27	ENAB	i	Signal to settle the horizontal display position	
28	VCC	i	Power supply	
29	VCC	i	Power supply	
30	R/L	i	Horizontal display mode select signal	Note 2
31	U/D	i	Vertical display mode select signal	Note 3
32	TST	-		Note 4

Note 1: GND is connected to the frame of the LCD module.
Note 2: When R/L is "High" or open, the direction of horizontal scanning is normal. When R/L is "Low", the direction of horizontal scanning is reversed.

ALL RIGHTS STRICTLY RESERVED. ANY PORTION OF THIS PAPER SHALL NOT BE REPRODUCED, COPIED, OR TRANSFORMED TO ANY OTHER FORMS WITHOUT PERMISSION FROM UNIPAC OPTOELECTRONICS CORP.

Note 3: When U/D is "High" or open, the direction of vertical scanning is normal. When U/D is "Low", the direction of vertical scanning is reversed.
Note 4: This pin should be electrically opened.

2. Absolute maximum ratings (GND = 0 V)

Parameter	Symbol	Min.	Max.	Unit	Remark
Supply voltage	V_{CC}	-0.3	4.3	V	Note 1
Input voltage	V_i	-0.3	V_{CC}+0.3	V	Note 1,2
Storage temperature	Tstg	-25	+60	°C	Note 3
Operating temperature	Topp	0	+60	°C	Note 3,4
	Topa	0	+50	°C	Note 3,4

Note 1: Ta = 25°C
Note 2: CLK,R0~R5,G0~G5,B0~B5,Hsync,Vsync and ENAB terminals.
Note 3: Maximum wet-bulb temperature 38°C or less, no dew condensation.
Note 4: Topp : Panel temperature.
Topa : Ambient temperature.
Please pay attention to the temperature rise induced by the inserted backlight.

3. Electrical characteristics

a. Typical operating conditions

Parameter		Symbol	Min.	Typ.	Max.	Unit	Remark
Supply voltage		V_{CC}	3.0	3.3	3.6	V	
Logic input voltage	H level	V_{IH}	$V_{CC} \times 0.7$	-	V_{CC}	V	
	L level	V_{IL}	0	-	$V_{CC} \times 0.3$	V	

b. Current consumption

Parameter	Symbol	Condition	Min.	Typ.	Max.	Unit	Remark
Supply current	I_{CC}	V_{CC} = +3.3V	-	140	300	mA	Note 1

Note 1: Under 64 grayscale pattern.

ALL RIGHTS STRICTLY RESERVED. ANY PORTION OF THIS PAPER SHALL NOT BE REPRODUCED, COPIED, OR TRANSFORMED TO ANY OTHER FORMS WITHOUT PERMISSION FROM UNIPAC OPTOELECTRONICS CORP.

c.Display color v.s. input data signals

Display colors		Data signal (0: Low level , 1: High level)																	
		R5	R4	R3	R2	R1	R0	G5	G4	G3	G2	G1	G0	B5	B4	B3	B2	B1	B0
Basic colors	Black	0	0	0	0	0	0	0	0	0	0	0	0	0	0	0	0	0	0
	Blue	0	0	0	0	0	0	0	0	0	0	0	0	1	1	1	1	1	1
	Red	1	1	1	1	1	1	0	0	0	0	0	0	0	0	0	0	0	0
	Magenta	1	1	1	1	1	1	0	0	0	0	0	0	1	1	1	1	1	1
	Green	0	0	0	0	0	0	1	1	1	1	1	1	0	0	0	0	0	0
	Cyna	0	0	0	0	0	0	1	1	1	1	1	1	1	1	1	1	1	1
	Yellow	1	1	1	1	1	1	1	1	1	1	1	1	0	0	0	0	0	0
	White	1	1	1	1	1	1	1	1	1	1	1	1	1	1	1	1	1	1
Red grayscale	Black	0	0	0	0	0	0	0	0	0	0	0	0	0	0	0	0	0	0
		0	0	0	0	0	1	0	0	0	0	0	0	0	0	0	0	0	0
	dark	0	0	0	0	1	0	0	0	0	0	0	0	0	0	0	0	0	0
	↑																		
	↓																		
	bright																		
		1	1	1	1	0	1	0	0	0	0	0	0	0	0	0	0	0	0
		1	1	1	1	1	0	0	0	0	0	0	0	0	0	0	0	0	0
	Red	1	1	1	1	1	1	0	0	0	0	0	0	0	0	0	0	0	0
Green grayscale	Black	0	0	0	0	0	0	0	0	0	0	0	0	0	0	0	0	0	0
		0	0	0	0	0	0	0	0	0	0	0	1	0	0	0	0	0	0
	dark	0	0	0	0	0	0	0	0	0	0	1	0	0	0	0	0	0	0
	↑																		
	↓																		
	bright																		
		0	0	0	0	0	0	1	1	1	1	0	1	0	0	0	0	0	0
		0	0	0	0	0	0	1	1	1	1	1	0	0	0	0	0	0	0
	Green	0	0	0	0	0	0	1	1	1	1	1	1	0	0	0	0	0	0
Blue grayscale	Black	0	0	0	0	0	0	0	0	0	0	0	0	0	0	0	0	0	0
		0	0	0	0	0	0	0	0	0	0	0	0	0	0	0	0	0	1
	dark	0	0	0	0	0	0	0	0	0	0	0	0	0	0	0	0	1	0
	↑																		
	↓																		
	bright																		
		0	0	0	0	0	0	0	0	0	0	0	0	1	1	1	1	0	1
		0	0	0	0	0	0	0	0	0	0	0	0	1	1	1	1	1	0
	Blue	0	0	0	0	0	0	0	0	0	0	0	0	1	1	1	1	1	1

Note : Each basic color can be displayed in 64 gray scales using the 6 bit data signals. By combing the 18 bit data signals(R,G,B), the 262,144 colors can be achieved on the display.

ALL RIGHTS STRICTLY RESERVED. ANY PORTION OF THIS PAPER SHALL NOT BE REPRODUCED, COPIED, OR TRANSFORMED TO ANY OTHER FORMS WITHOUT PERMISSION FROM UNIPAC OPTOELECTRONICS CORP.

d. Input signal timing

Timing diagrams of input signal are shown in Fig 2 and Fig 3.

(1).Timing chart

Parameter		Symbol	Min.	Typ.	Max.	Unit	Remark
CLK	Frequency	1/Tc	-	25.18	28.3	MHz	
	High time	Tch	5	-	-	ns	
	Low time	Tcl	10	-	-	ns	
Hsync	Period	TH	30.0	31.78	-	μs	
			770	800	900	CLK	
	Display period	THd	-	25.4	-	μs	
			640			CLK	
	Pulse width	THp	2	96	200	CLK	
	Hsync-CLK timing	THc	10	-	Tc-10	ns	
Vsync	Hsync-Vsync timing	TVh	0	-	TH-THp	CLK	
	Period	TV	16.1	16.7	17.2	ms	
			515	525	560	TH	
	Display period	TVd	-	15.3	-	ms	
			480			TH	
	Pulse width	TVp	2	-	34	TH	
DATA R0~R5 G0~G5 B0~B5	CLK-DATA timing	Tds	5	-	-	ns	
	DATA-CLK timing	Tdh	10	-	-	ns	
	Rising time falling time	Tdrf	-	-	10	ns	

(2). Horizontal display position

(a)ENAB mode:

The horizontal display position is determined by ENAB signal and the input data corresponding to the rising edge of ENAB .

parameter		symbol	Min.	Typ.	Max.	Unit	Remark
Enable signal	setup time	Tes	5	-	Tc-10	ns	
	pulse width	Tep	-	640	-	CLK	
Hsync-Enable signal timing		THe	16	-	164	CLK	

(b)Fix mode:

When ENAB is fixed "Low", the display starts from the data of C48(clock) as shown in Fig 3. Be careful that the module does not work when ENAB is fixed "High".

ALL RIGHTS STRICTLY RESERVED. ANY PORTION OF THIS PAPER SHALL NOT BE REPRODUCED, COPIED, OR TRANSFORMED TO ANY OTHER FORMS WITHOUT PERMISSION FROM UNIPAC OPTOELECTRONICS CORP.

(3). Vertical display position

parameter	symbol	Min.	Typ.	Max.	Unit	Remark
Vertical display position	TVS		34		H	Fix mode
		4	-	68	H	ENAB mode

e.Display position

D(0,0)	D(1,0)	.....	D(X,0)	.....	D(638,0)	D(639,0)
D(0,1)	D(1,1)	.....	D(X,1)	.....	D(638,1)	D(639,1)
:	:	.....	:	.....	:	:
D(0,Y)	D(1,Y)	.....	D(X,Y)	.....	D(638,Y)	D(639,Y)
:	:	.....	:	.....	:	:
D(0,478)	D(1,478)	.....	D(X,478)	.....	D(638,478)	D(639,478)
D(0,479)	D(1,479)	.....	D(X,479)	.....	D(638,479)	D(639,479)

f. Backlight driving conditions

Parameter	Symbol	Min.	Typ.	Max.	Unit	Remark
Lamp voltage	V_L	-	390	-	Vrms	Note 2
Lamp current	I_L	3.2	3.5	3.8	mArms	Note 2
Lamp starting voltage	V_S	-	-	1,250	Vrms	Note 1
		-	-	1,100		Note 2
Frequency	F_L	-	60	-	KHz	
Lamp life time	L_L	10,000	-	-	Hr	Note 2

Note 1: T= 0°C
Note 2: T=25°C

(4). Power ON/OFF Sequence
To prevent a latch-up or DC operation of the LCD module, the power on/off sequence shall be as shown below.

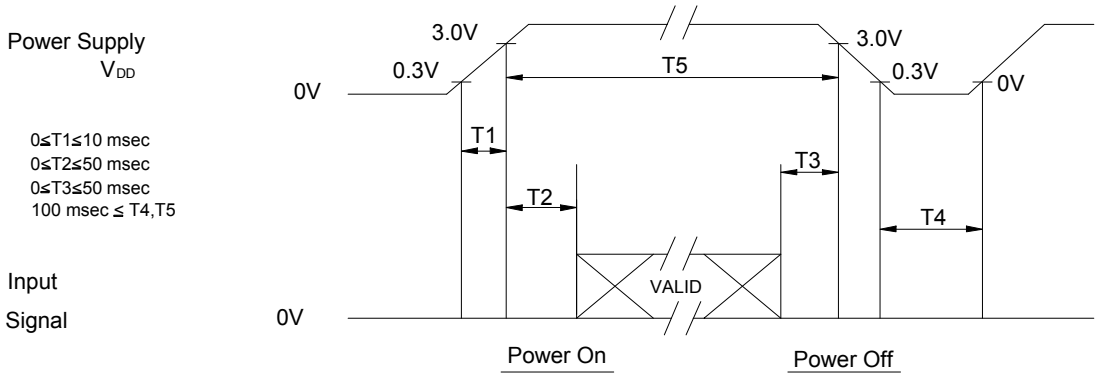

Power ON/OFF Sequence

NOTE : Do not keep the interface signal high-impedance when power is on.

ALL RIGHTS STRICTLY RESERVED. ANY PORTION OF THIS PAPER SHALL NOT BE REPRODUCED, COPIED, OR TRANSFORMED TO ANY OTHER FORMS WITHOUT PERMISSION FROM UNIPAC OPTOELECTRONICS CORP.

C. Optical specifications (Note 1, Note 2, Note 3)

Item	Symbol	Condition	Specification			Unit	Remark
			Min.	Typ.	Max.		
Response time Rising time Falling time	 T_r T_f	θ =0°	 - -	 25 30	 50 60	ms	Note 4
Contrast ratio	CR	At optimized viewing angle	100	150	-		Note 5
Viewing angle Top Bottom Left Right		CR ≧10	 10 30 45 45	 - - - -	 - - - -	deg.	Note 8
Brightness	Y_L	θ =0°	50	60	-	nit	Note 6, 7
White chromaticity	x	θ =0°	0.28	0.33	0.38		
	y		0.31	0.36	0.41		
White uniformity	δ_w		-	-	1.45		Note 9

Note 1: Ambient temperature = 25°C.
Note 2: To be measured in dark room.
Note 3: To be measured with a viewing cone of 1° by Topcon luminance meter BM-7.
Note 4: Definition of response time:
The output signals of photodetector are measured when the input signals are changed from "Black" to "White" (falling time) and from "White" to "Black" (rising time), respectively. The response time is defined as the time interval between the 10% and 90% of amplitudes. Refer to figure as below.

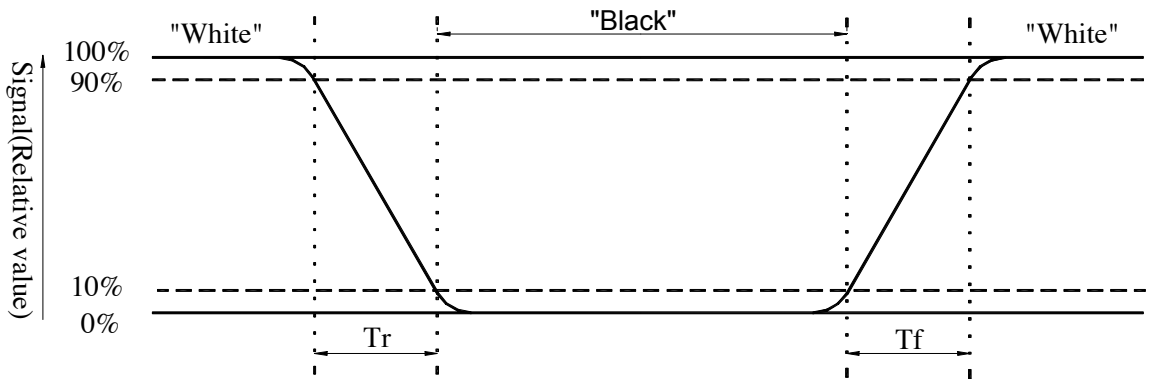

ALL RIGHTS STRICTLY RESERVED. ANY PORTION OF THIS PAPER SHALL NOT BE REPRODUCED, COPIED, OR TRANSFORMED TO ANY OTHER FORMS WITHOUT PERMISSION FROM UNIPAC OPTOELECTRONICS CORP.

Note 5: Definition of contrast ratio:
Contrast ratio is calculated with the following formula.

$$\text{Contrast Ratio(CR)} = \frac{\text{Photodetector output when LCD is at " White " state}}{\text{Photodetector output when LCD is at " Black " state}}$$

Note 6: Measured on the center area of the panel.
Note 7: Driving conditions for CCFT : Irms=3.5mA.
Note 8: Definition of viewing angle:

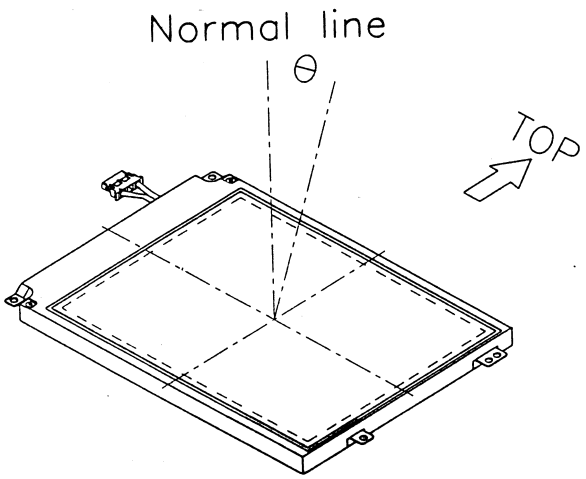

Note 9: Definition of white uniformity:
White uniformity is defined as the following with five measurements (A~E).

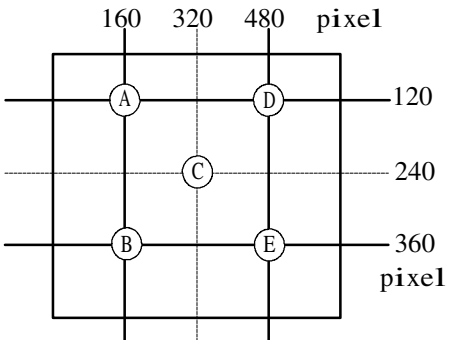

$$\delta_W = \frac{\text{Maximum Luminance of five points (brightness)}}{\text{Minimum Luminance of five points (brightness)}}$$

ALL RIGHTS STRICTLY RESERVED. ANY PORTION OF THIS PAPER SHALL NOT BE REPRODUCED, COPIED, OR TRANSFORMED TO ANY OTHER FORMS WITHOUT PERMISSION FROM UNIPAC OPTOELECTRONICS CORP.

D. Reliability test items

Test tem	Test Condition	Remark
High temperature storage	60°C , 240Hrs	
Low temperature storage	-25°C , 240Hrs	
High temperature & high humidity operation	40°C , 95%RH , 240Hrs (No condensation)	
High temperature operation	50°C , 240Hrs	
Low temperature operation	0°C , 240Hrs	
Temperature cycling (non-operation)	-25°C ~ 60 2hrs,30mins,2hrs,5cycles	
Electrostatic discharge (non-operation)	150PF,150Ω,±10KV,1second, 9 places on the panel,10 times each place	Note 1
Vibration (non-operation)	Frequency range: 10 ~ 55Hz stroke:1.5mm Sweep:10Hz ~ 55Hz ~ 10Hz 1 hour for each direction X, Y, Z (3 Hrs in total)	
Mechanical shock (non-operation)	50G, 11ms , ±X, ±Y ,±Z once for each direction	

Note 1:The discharging points are shown as bellow.

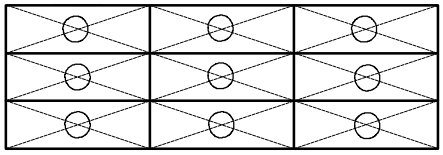

E. Display quality

The display quality of the color TFT-LCD module should be in compliance with the unipac's "Incoming Inspection Standard For 6.1" TFT-LCD Modules", specification NO:251-160-501.

ALL RIGHTS STRICTLY RESERVED. ANY PORTION OF THIS PAPER SHALL NOT BE REPRODUCED, COPIED, OR TRANSFORMED TO ANY OTHER FORMS WITHOUT PERMISSION FROM UNIPAC OPTOELECTRONICS CORP.

F. Packing form (TBD)

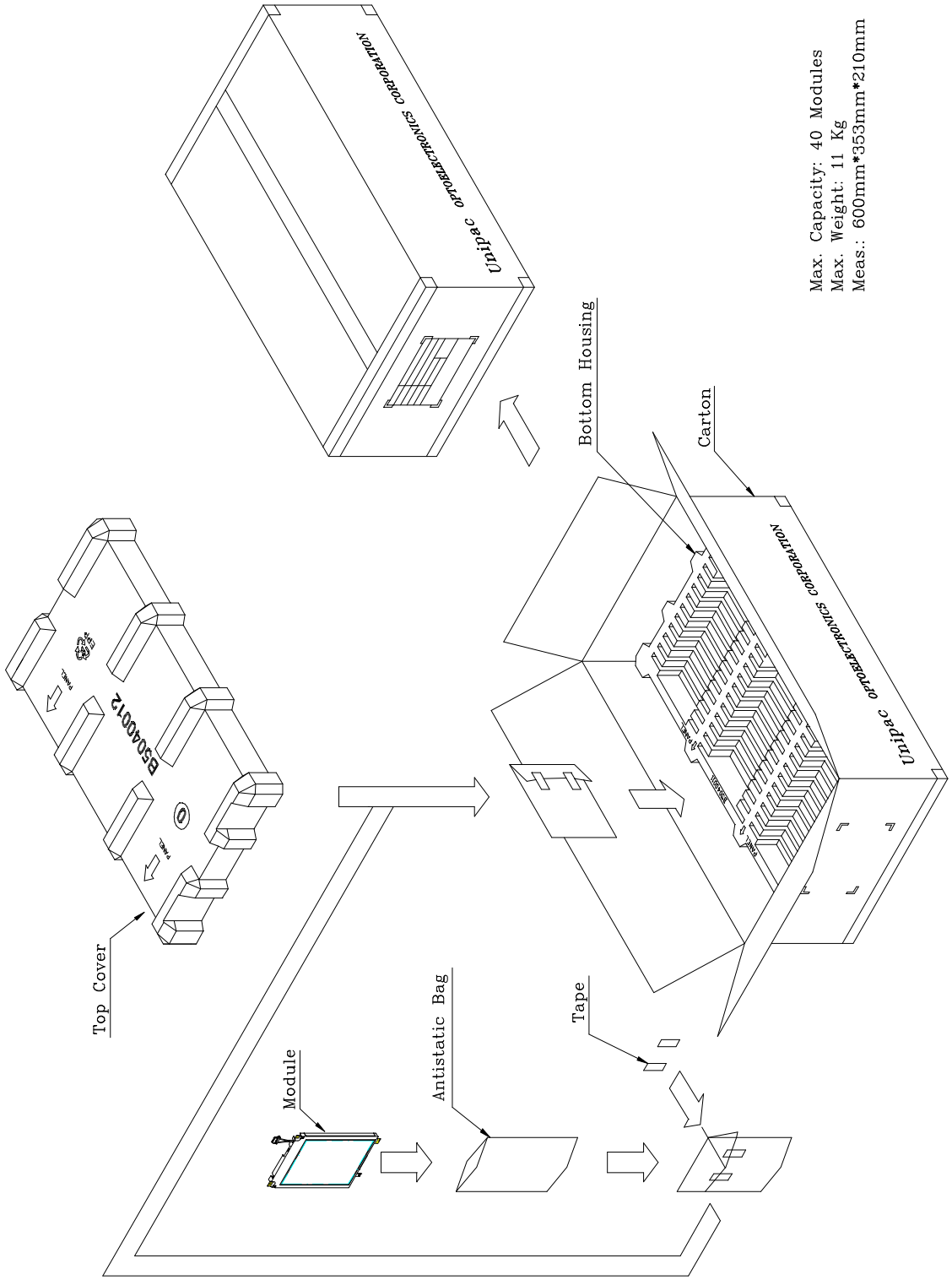

ALL RIGHTS STRICTLY RESERVED. ANY PORTION OF THIS PAPER SHALL NOT BE REPRODUCED, COPIED, OR TRANSFORMED TO ANY OTHER FORMS WITHOUT PERMISSION FROM UNIPAC OPTOELECTRONICS CORP.

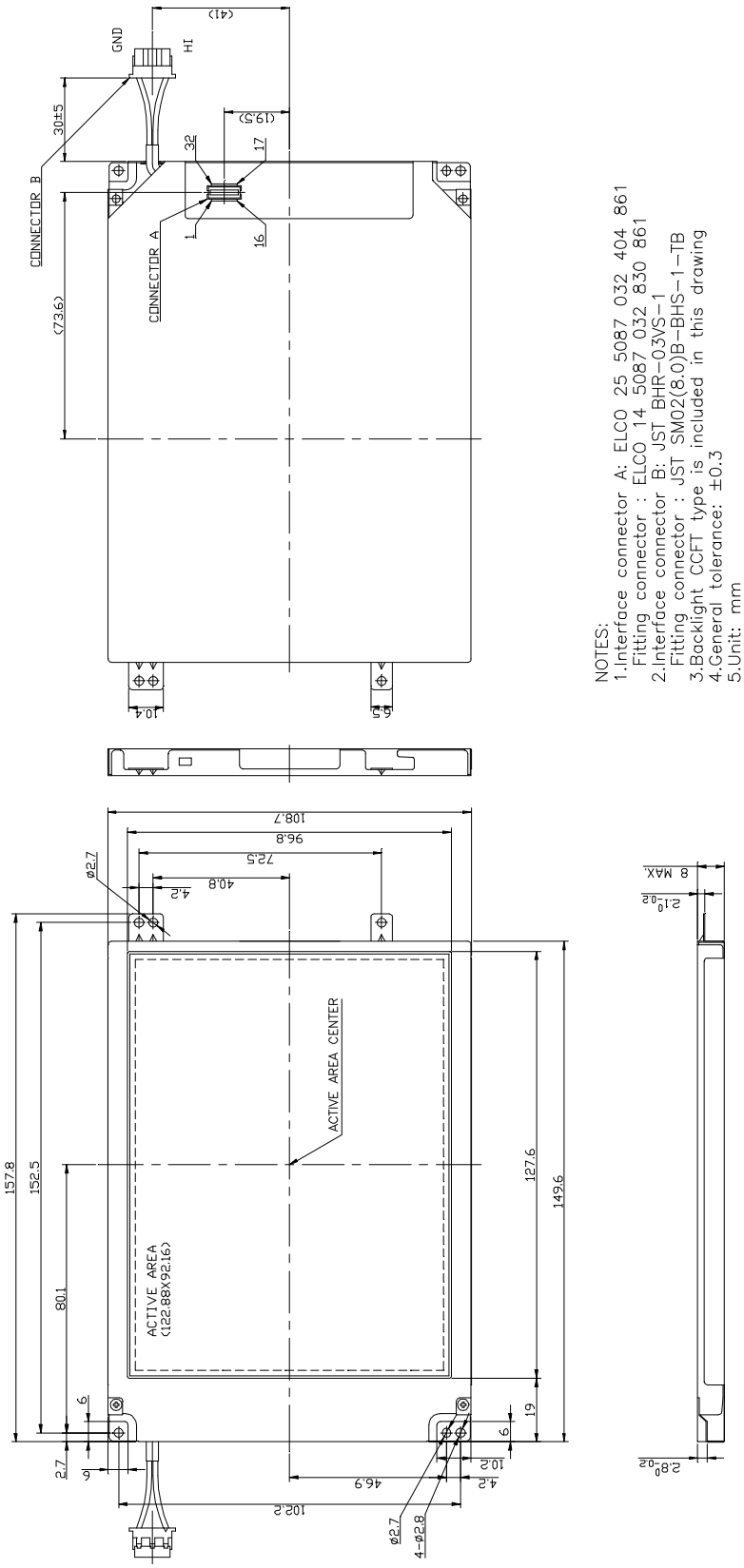

NOTES:
1.Interface connector A: ELCO 25 5087 032 404 861
Fitting connector : ELCO 14 5087 032 830 861
2.Interface connector B: JST BHR-03VS-1
Fitting connector : JST SM02(8.0)B-BHS-1-TB
3.Backlight CCFT type is included in this drawing
4.General tolerance: ±0.3
5.Unit: mm

Fig.1 Outline dimension of TFT-LCD module

ALL RIGHTS STRICTLY RESERVED. ANY PORTION OF THIS PAPER SHALL NOT BE REPRODUCED, COPIED, OR TRANSFORMED TO ANY OTHER FORMS WITHOUT PERMISSION FROM UNIPAC OPTOELECTRONICS CORP.

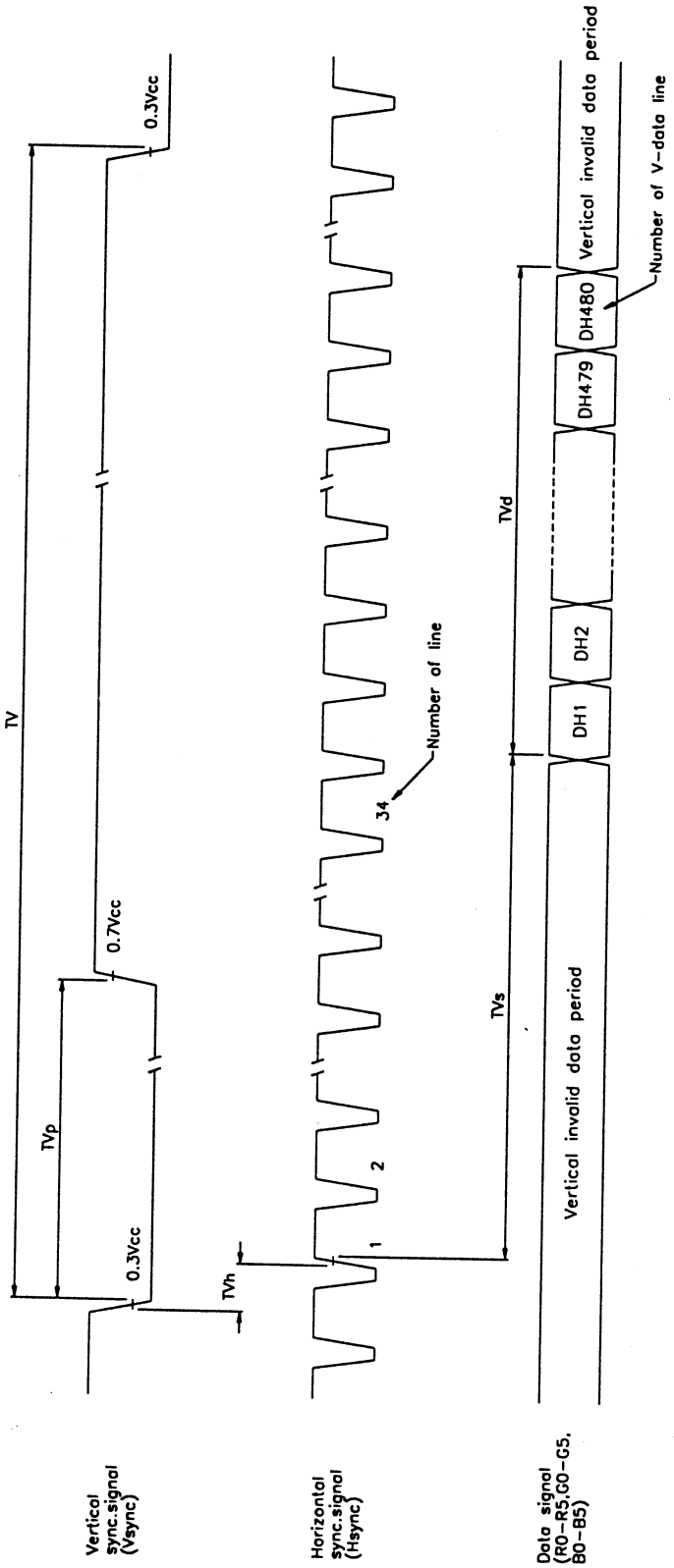

Fig.2 Vertical timing chart

ALL RIGHTS STRICTLY RESERVED. ANY PORTION OF THIS PAPER SHALL NOT BE REPRODUCED, COPIED, OR TRANSFORMED TO ANY OTHER FORMS WITHOUT PERMISSION FROM UNIPAC OPTOELECTRONICS CORP.

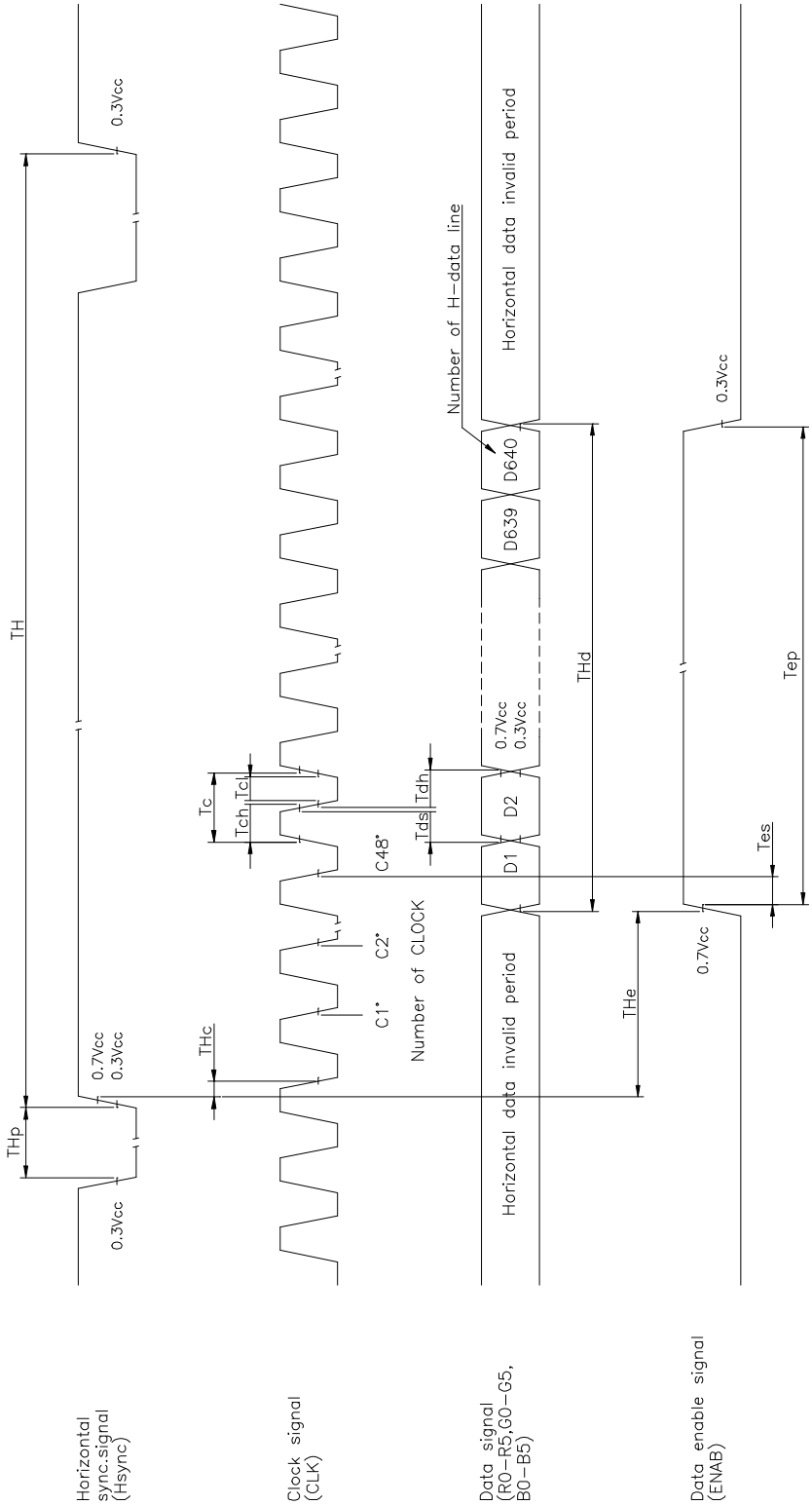

Fig.3 Horizontal timing chart

ALL RIGHTS STRICTLY RESERVED. ANY PORTION OF THIS PAPER SHALL NOT BE REPRODUCED, COPIED, OR TRANSFORMED TO ANY OTHER FORMS WITHOUT PERMISSION FROM UNIPAC OPTOELECTRONICS CORP.